KING LAI GROUP®

AdvanTorr®

VACUUM PRODUCT

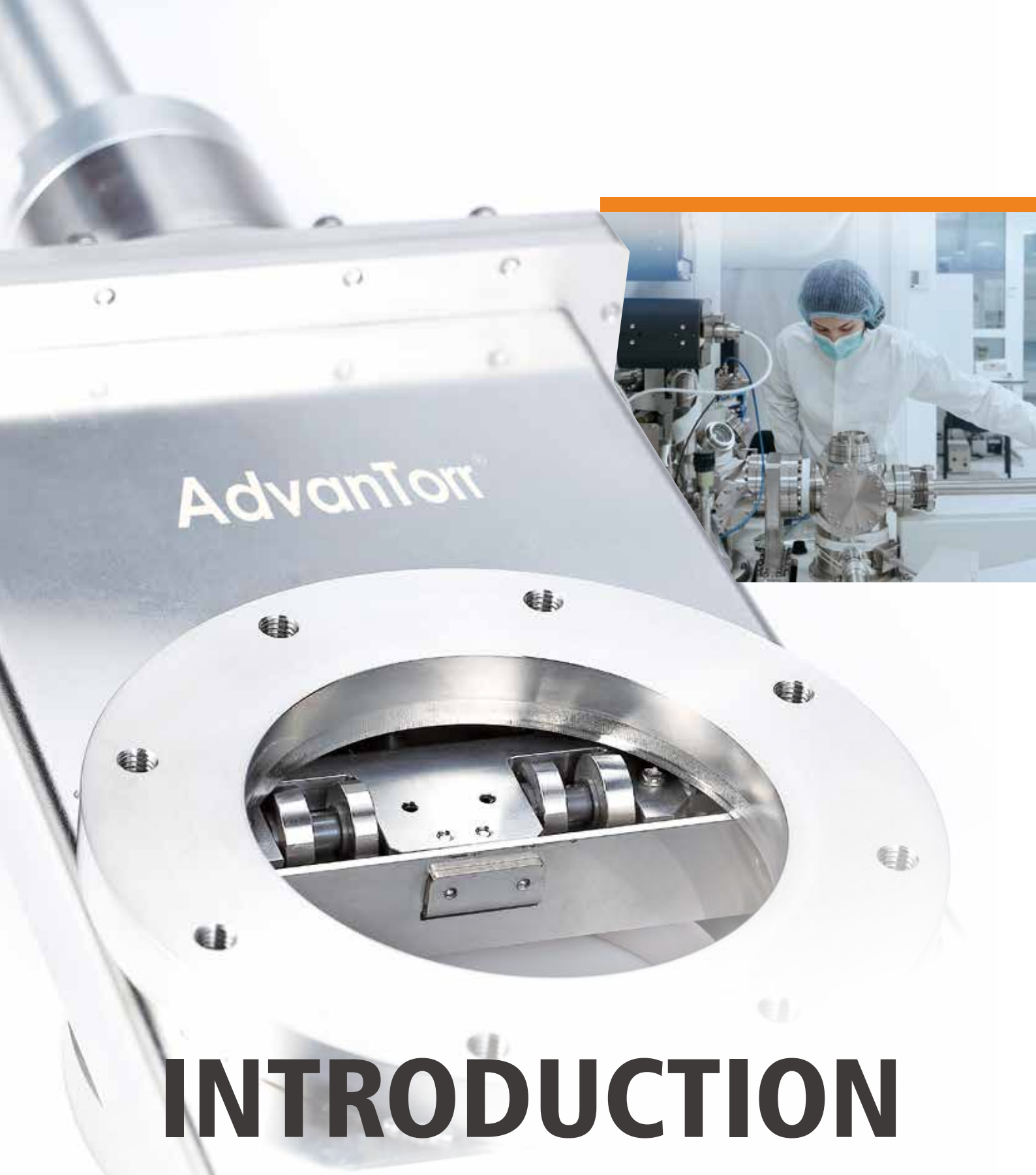

INTRODUCTION

AdvanTorr® is a top-notch trusted manufacturer of vacuum equipment, which includes an extensive selection of system components such as vacuum grade valves, flanges, fittings, adaptors, butt welds, flex hoses and chambers.

Vacuum Valves

01. Transfer Slit Valves

Lock System	ARM lock system									
Vacuum Level	UHV grade		HV grade							
Valve Body Material	Stainless steel 304L		Aluminum alloy				Stainless steel 304L			
Aperture (mm)	32x222	46x236	32x222	46x236	50x336	70x500	32x222	46x236	50x336	70x500

02. Gate Valves

Lock System	SMART lock system	In - Axis with SMART lock system	
Actuator Orientation	Side-mounted actuator	Top-mounted actuator	
Actuator Type	Manual lever / Pneumatic	Manual wheel / Pneumatic	
Vacuum Level	HV grade	UHV grade	HV grade
Flange Type	CF / ISO-F Flanges	CF Flanges	CF / ISO-F Flanges

03. Mini Gate Valves

Lock System	SMART lock system
Vacuum Level	UHV Grade
Actuator Type	Manual wheel / Pneumatic
Flange Type	CF Flanges

04. Aluminum Gate Valves

Lock System	Smart Lock System
Vacuum Level	HV Grade
Actuator Type	Pneumatic
Flange Type	ISO-F Flanges

05. Isolation Poppet Valves

Actuator Type	Manual wheel				Pneumatic				
Valve Body Types	Angle		Y shape	Y shape Z shape	Angle		Heating Angle	Y shape	Y shape Z shape
Vacuum Level	UHV grade	HV grade	UHV grade	HV grade	UHV grade	HV grade	HV grade	UHV grade	HV grade
Flange Types	CF Flange	CF / KF / ISO-K Flange	CF Flange	CF / KF / ISO-K Flange	CF Flange	CF / KF / ISO-K Flange	KF Flange	CF Flange	CF / KF / ISO-K Flange

06. Isolation Ball Valves

Actuator Type	Manual lever	Pneumatic
Valve Body Types	Casting	
Flange Types	KF Flanges / Tube ends	

Transfer Slit Valves

Product Introduction

The Transfer Slit Valve (TSV), is gate-like mechanism designed to connect two sealed chambers for the purpose of transferring objects from one to the other. The TSV features single axis motion, ensuring smooth and particle-free movement with no vibration. Its 'ARMLOCK' motion provides a secure seal in the closed position, even in the event of power and air supply failure during operation. With a durable, maintenance-free design capable of up to 5 million cycles, the TSV is built to last. Its simple modular design also makes it easy to service if required.

Product Features

- Ability to remain closed against large pressure differential
- Maintains closed position in the event of power or air loss
- Vulcanized seal for maintenance-free operation
- >5 million cycles between maintenance
- Suitable for SEMI wafer processing applications up to 450mm

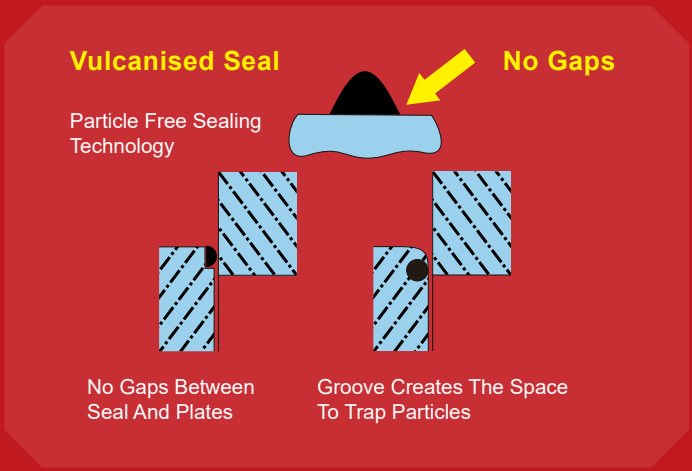

ARM Feature

- **Patented mechanism**
- **Low maintenance cost**
- **No gears, no need for relocation**
- **High reliability**
- **Particle free seal**

ARM Lock System

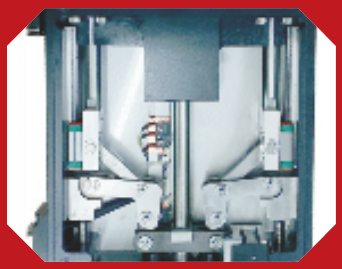

Open

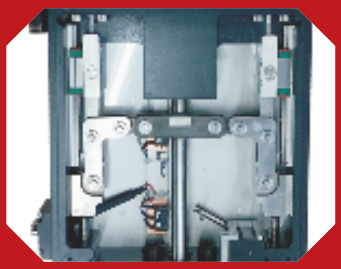

Closed

Product Application

- A critical components in semiconductor manufacturing equipment.
- Commonly used for wafer transfer, deposition, etching, ion implantation, and metrology applications.
- Provide a vacuum-tight seal to maintain the purity of the processing environment.
- Enable precise control of the process parameters, such as gas flow, pressure, and temperature.
- Essential for achieving high-quality, consistent semiconductor products.

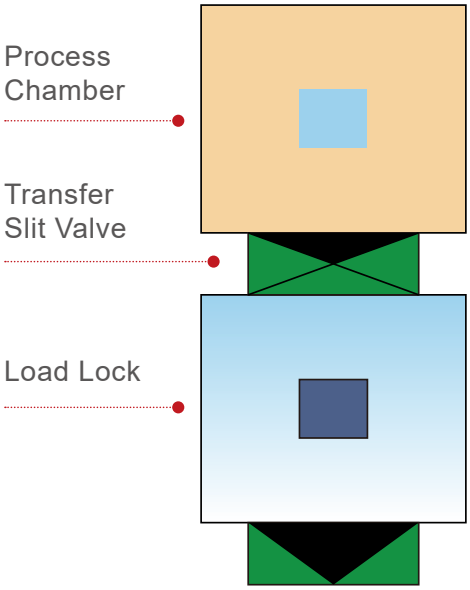

Transfer Slit Valve

Ideal for multiple process chamber systems.

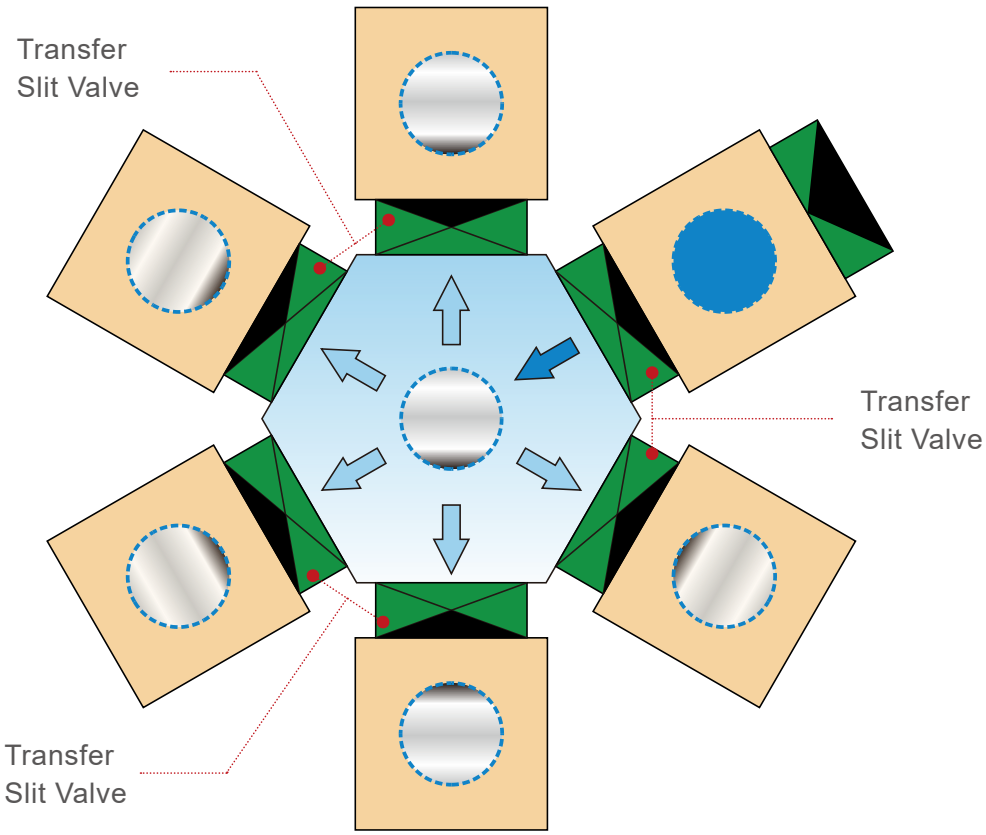

Transfer Slit Valves

Valve's Operation Concept

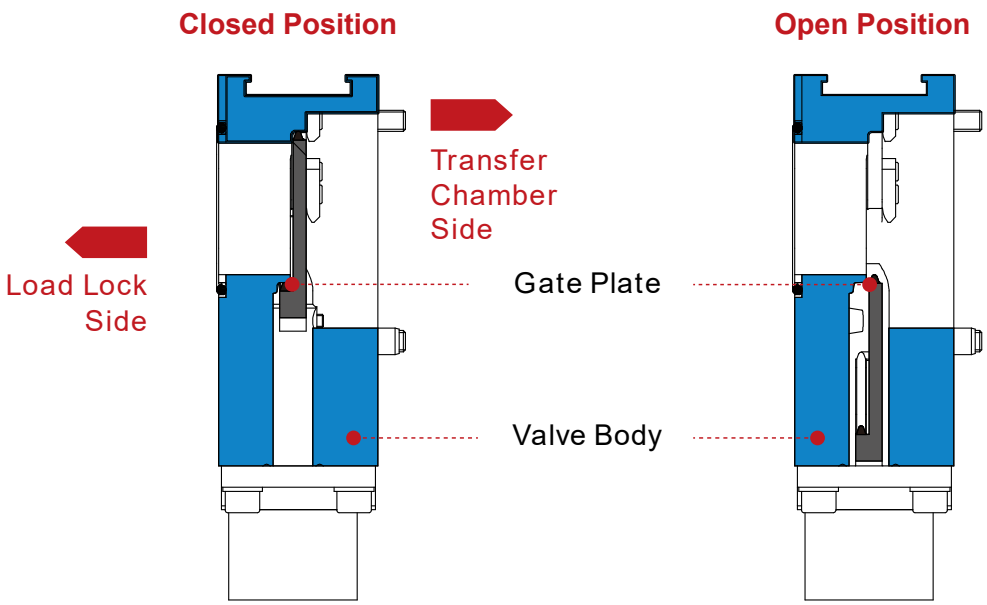

Technical Data for Transfer Slit Valves

	Ultra High Vacuum	High Vacuum
Feedthrough	Welded bellows in AM350	Welded bellows in AM350
Gate seal	FKM vulcanized ring with bonding on the metal (Optional for FFKM)	FKM vulcanized ring with bonding on the metal (Optional for FFKM)
Bonnet seal	OFHC metal gasket	FKM vulcanized ring
Operate pressure range	760 Torr ~ $1x10^{-10}$ Torr 1,000 mbar~$1.33x10^{-10}$ mbar 100 kPa~ $1.13x10^{-11}$ kPa	760 Torr ~ $1x10^{-8}$ Torr 1,000 mbar~$1.33x10^{-8}$ mbar 100 kPa~ $1.13x10^{-9}$ kPa
Leak rate	1 x 10^{-10} Torr l/s, He $1.33x10^{-10}$ mbar l/s, He $1.13x10^{-11}$ kPa l/s, He	1 x 10^{-9} Torr l/s, He $1.33x10^{-9}$ mbar l/s, He $1.13x10^{-10}$ kPa l/s, He
Cycle life	>5,000,000 Cycles (ATM)	
Temperature for valve body	Aluminum version: 150°C (302°F) open and close Stainless Steel version= 200°C (392°F) open and close	
Temperature for actuator	100°C (212°F)	
Temperature for solenoid / position indicator	80°C / 176°F	
Bake temperature	200°C (392°F) for FKM gate seal	100°C (212°F) for FKM gate seal
Valve body material	SS304L (Optional for SS316L)	SS304L (Optional for SS316L and Aluminum)
Mechanism material	Steel and Aluminum	
Actuator material	Aluminum	
Mounting position	Any	

Valve Operation Data

Pneumatic operating pressure	3 bar~5 bar 300 kPa~500 kPa 43 psi~72 psi
Position indicator (included as standard)	Micro switch with 9 pin connector
Cycles counter (included as standard)	Micro switch with visual 7 digital numbers
Solenoid (optional)	Optional for 24V DC, standard
Failure protection (included as standard)	ARM lock system (Valve closed position remain and locked)

Valve's Performance Data

	32x222mm	46x236mm	50x336mm	70x500mm
Maximum differential pressure against gate	<900 Torr <1,200 mbar <120 kpa			
Maximum differential presure at opening	<22.5 Torr <30 mbar < 3kpa			
Pneumatic valve open / close time	0.5(s)	0.5(s)	0.7(s)	0.9(s)
Valve's conductance (molecular flow)	1,590(l/s)	3,340(l/s)	5,000(l/s)	10,400(l/s)

Transfer Slit Valves

Figure 1

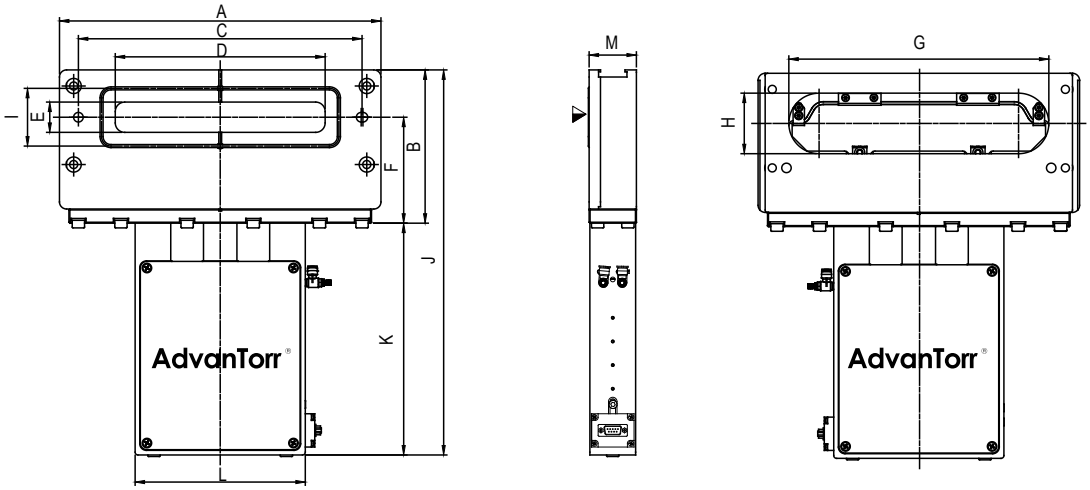

Figure 2

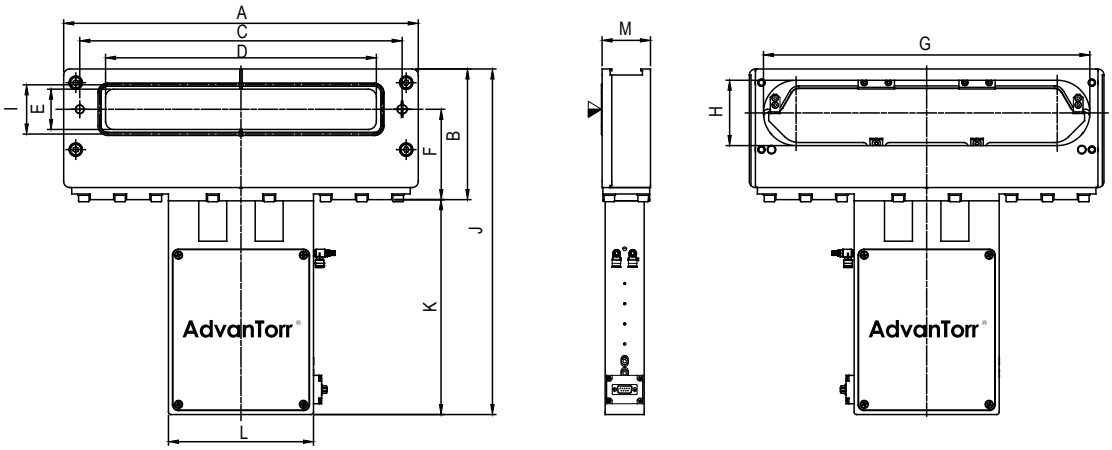

Figure 3

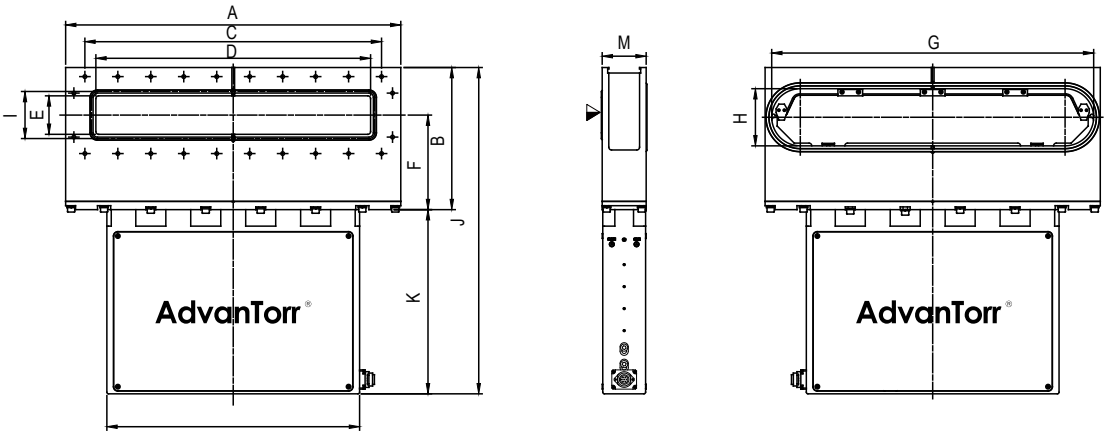

01. Transfer Slit Valves, UHV

Material SS 304L

Part Number	Size	Figure	A	B	C	D	E	F	G	H	I	J	K	L	M
TSV-UHV-32x222	32 x 222	1	340	162	300	222	32	112	275	64	61	407	245	180	50
TSV-UHV-46x236	46 x 236	2	340	162	300	236	46	112	305	80	61	429	267	180	50

02. Transfer Slit Valves, HV

Material SS 304L

Part Number	Size	Figure	A	B	C	D	E	F	G	H	I	J	K	L	M
TSV-HV-32x222	32 x 222	1	340	162	300	222	32	112	275	64	61	407	245	180	50
TSV-HV-46x236	46 x 236	2	340	162	300	236	46	112	305	80	62	429	267	180	50
TSV-HV-50x336	50 x 336	2	440	162	400	336	50	112	405	81	61	429	267	180	60
TSV-HV-70x500	70 x 500	3	610	259	540	500	70	172	586	104	85	594	335	460	80

03. Transfer Slit Valves,HV

Material Aluminum

Part Number	Size	Figure	A	B	C	D	E	F	G	H	I	J	K	L	M
TSV-HV-32x222-AL	32 x 222	1	340	162	300	222	32	112	275	64	61	407	245	180	50
TSV-HV-46x236-AL	46 x 236	2	340	162	300	236	46	112	305	80	62	429	267	180	50
TSV-HV-50x336-AL	50 x 336	2	440	162	400	336	50	112	405	81	61	429	267	180	60
TSV-HV-70x500-AL	70 x 500	3	610	259	540	500	70	172	586	104	85	594	335	460	80

- Dimension in mm

L-Motion

Technical Data for L-MOTION

	High Vacuum
Feedthrough	Shaft feedthrough
Gate seal	FKM o-ring
Bonnet seal	FKM o-ring
Operate pressure range	1 x 10^{-7} mbar to 1.6 bar(abs)
Leak rate	< 1 x 10^{-9} mbar l/s
Cycle life	> 200,000
Temperature for valve body	≤ 150 °C
Temperature for actuator	≤ 60 °C
Temperature for solenoid / position indicator	≤ 70 °C
Bake temperature	-
Valve body material	304
Mechanism material	304
Actuator material	Aluminum
Mounting position	Actuator up

Valve's Operation Data

Pneumatic operating pressure	5~7 bar
position indicator (included as standard)	Magnetic sensor with wire end, standard
Cycles counter (included as standard)	N/A
Solenoid (optional)	N/A

Valve's Performance Data

	80 x 1100
Maximum differential pressure against gate	< 1.6 bar
Maximum differential pressure at opening	< 30 mbar
Pneumatic valve open / close time	< 2 (s)
Valve's conductance (molecular flow)	-

01. Vacuum L-Motion Valves, HV

Material SS 304

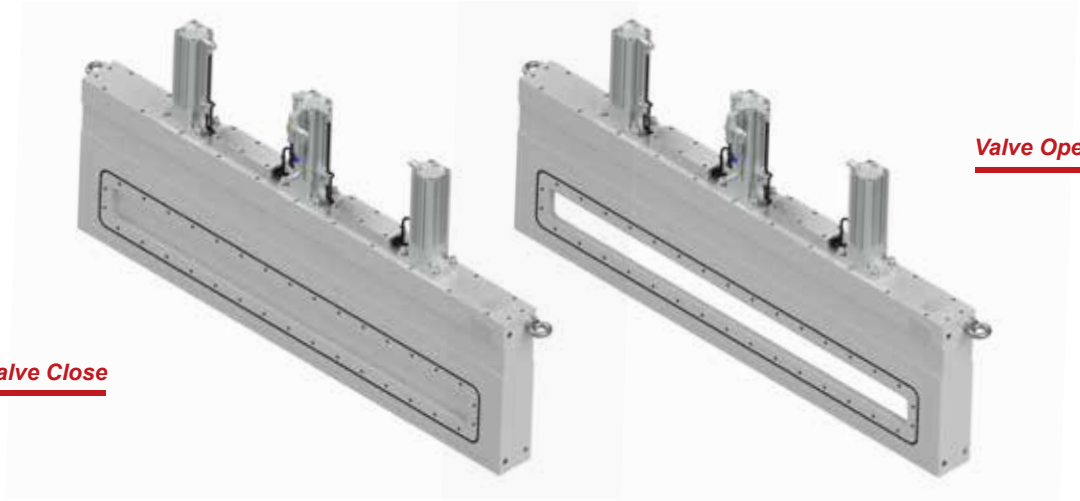

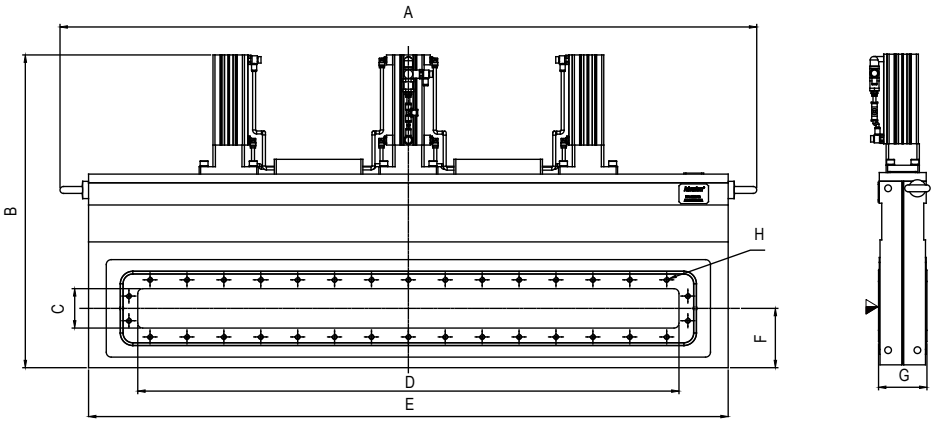

Part Number	Size	mm / inch	A	B	C	D	E	F	G	Thread H
ALM-HV-80X1100	80 x 1100	mm	1416	635	80	1100	1300	121	99	34xM10
	3.15” x 43.31”	inch	55.75”	25.01”	3.15”	43.31”	51.18”	4.74”	3.78”	

- Dimension in mm / inch

L-Motion

Technical Data for L-MOTION

	High Vacuum
Feedthrough	Bellows
Gate seal	FKM O-ring
Bonnet seal	FKM O-ring
Operate pressure range	$1 \cdot 10^{-9}$ mbar to 1.1 bar (abs)
Leak rate	< 1×10^{-9} mbar l/s
Cycle life	> 1 million
Temperature for valve body	≤ 120 °C
Temperature for actuator	≤ 80 °C
Temperature for solenoid / position indicator	≤ 80 °C
Bake temperature	-
Valve body material	Aluminum
Mechanism material	SUS304L, SUS630
Actuator material	Aluminum
Mounting position	Actuator up or down

Valve's Operation Data

Pneumatic operating pressure	5~7 bar
position indicator (included as standard)	Magnetic sensor with wire end, standard
Cycles counter (included as standard)	N/A
Solenoid (optional)	N/A

Valve's Performance Data

	50 x 336
Maximum differential pressure against gate	1.1 bar
Maximum differential pressure at opening	< 30 mbar
Pneumatic valve open / close time	< 1 (s)
Valve's conductance (molecular flow)	-

02. Transfer L-Motion Valves, HV

Material Aluminum

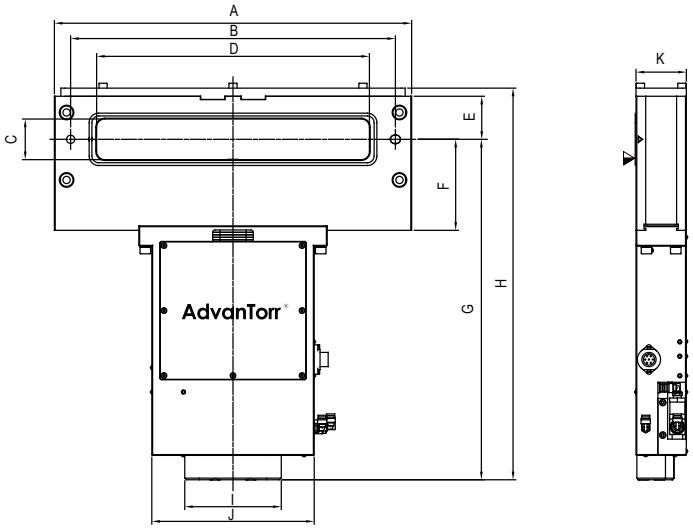

Part Number	Size	A	B	C	D	E	F	G	H	I	J	K
TLMV-HV-50X336	50x336	440	400	50	336	63	112	419	482	119	200	62

- Dimension in mm

Door Valves

Technical Data for Door valve

	High Vacuum
Feedthrough	N/A
Gate seal	N/A or FKM o-ring
Bonnet seal	FKM o-ring
Operate pressure range	1 x 10^{-9} mbar to 1.1 bar (abs)
Leak rate	< 1 x 10^{-9} mbar l/s
Cycle life	> 1 million
Temperature for valve body	≤ 120 °C
Temperature for actuator	≤ 80 °C
Temperature for solenoid / position indicator	≤ 70 °C
Bake temperature	-
Valve body material	Aluminum
Mechanism material	Aluminum
Actuator material	Aluminum
Mounting position	Actuator up or down

Valve's Operation Data

Pneumatic operating pressure	5~7 bar
position indicator (included as standard)	Magnetic sensor with wire end, standard
Cycles counter (included as standard)	N/A
Solenoid (optional)	N/A

Valve's Performance Data

		Door Valve
Maximum differential pressure against gate	In closing direction	1 bar
	In opening direction	< 0.1 bar
Maximum differential pressure at opening		< 0.1 bar
Pneumatic valve open / close time		< 2 (s)
Valve's conductance (molecular flow)		-

01. Door Valve

Material Aluminum

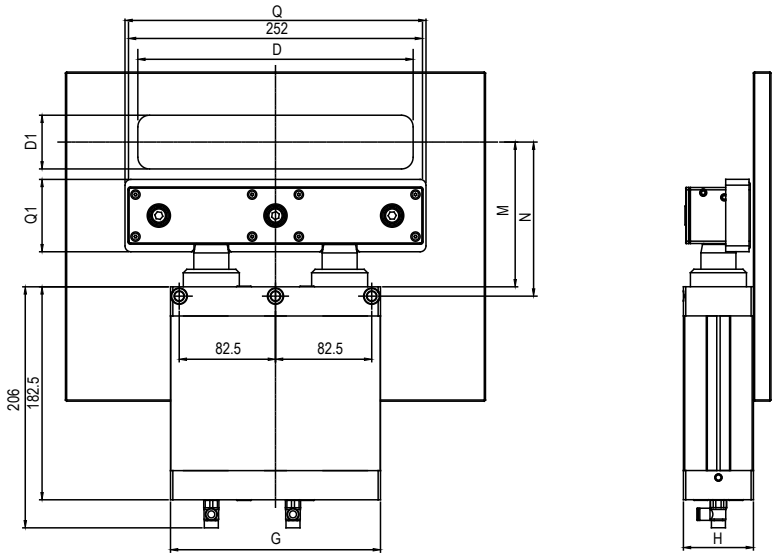

Part Number	Size	D	D1	G	H	M	N	Q	Q1
DV-HV-46X236-AL	46 x 236	236	46	180	60	124	132	258	62
	1.81” x 9.29”	9.29”	1.81”	7.09”	2.36”	4.88”	5.20”	9.85”	2.36”
DV-HV-50X336-AL	50 x 336	336	50	180	60	124	132	360	64
	1.97” x 13.23”	13.23”	1.97”	7.09”	2.36”	4.88”	5.20”	13.78”	2.36”
DV-HV-56X496-AL	56 x 496	496	56	180	60	124	132	520	71
	2.20” x 19.53”	19.53”	2.20”	7.09”	2.36”	4.88”	5.20”	20.08”	2.52”

- Dimension in mm/ inch

SMART Vacuum Gate Valves

Lock System

Position locked when the valve is open or closed

Product Introduction

Gate valves that operate in a vacuum are primarily utilized to safeguard high vacuum pumps. Gate valves can also be used to isolate two connecting chambers in a vacuum system, allowing for maintenance or repairs to be carried out on one chamber without affecting the other.

The **AdvanTorr**® advancements in sealing mechanisms have led to the development of the S.M.A.R.T. technology to create a superior seal and facilitate smooth, vibration-free operation.

The latest generation of SMART Gate Valves are specifically designed to reduce vibration during operation, resulting in significantly fewer particles being generated. This makes them an excellent choice for vacuum systems that require a clean environment.

These valves come in two different actuator orientation options:

- Side-mounted manual or pneumatic actuator (SGV part codes)
- In-Axis option (AGV part codes), which features a vertically mounted manual or pneumatic actuator and is ideal for applications where a small footprint is necessary

Both come equipped with the SMART lock system as standard that locks positions in open or closed.

Product Features

- **No springs!** Less wear and strain means longer life
- **Shock free 'soft shut' SMART technology.** The lowest vibration of any gate valve on the market
- **Vulcanized seal for repeatable, maintenance free operation**
- **Optional welded bellows feedthrough for cleanliness and improved service life**
- **Fail safe locking mechanism.** Locks in both the open and closed positions

■ S.M.A.R.T

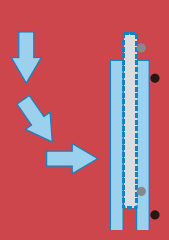

SMART mechanism seal plate operates with no vibration, ensuring particle free operation.

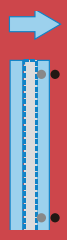

Conventional seal plate designs that use a spring mechanism can be susceptible to vibration during operation.

■ SMART lock system

Position locked when the valve is open or closed.

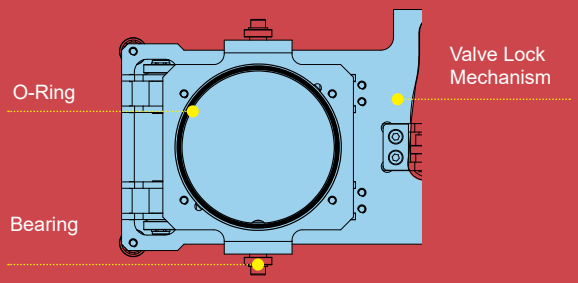

SMART Gate Valves

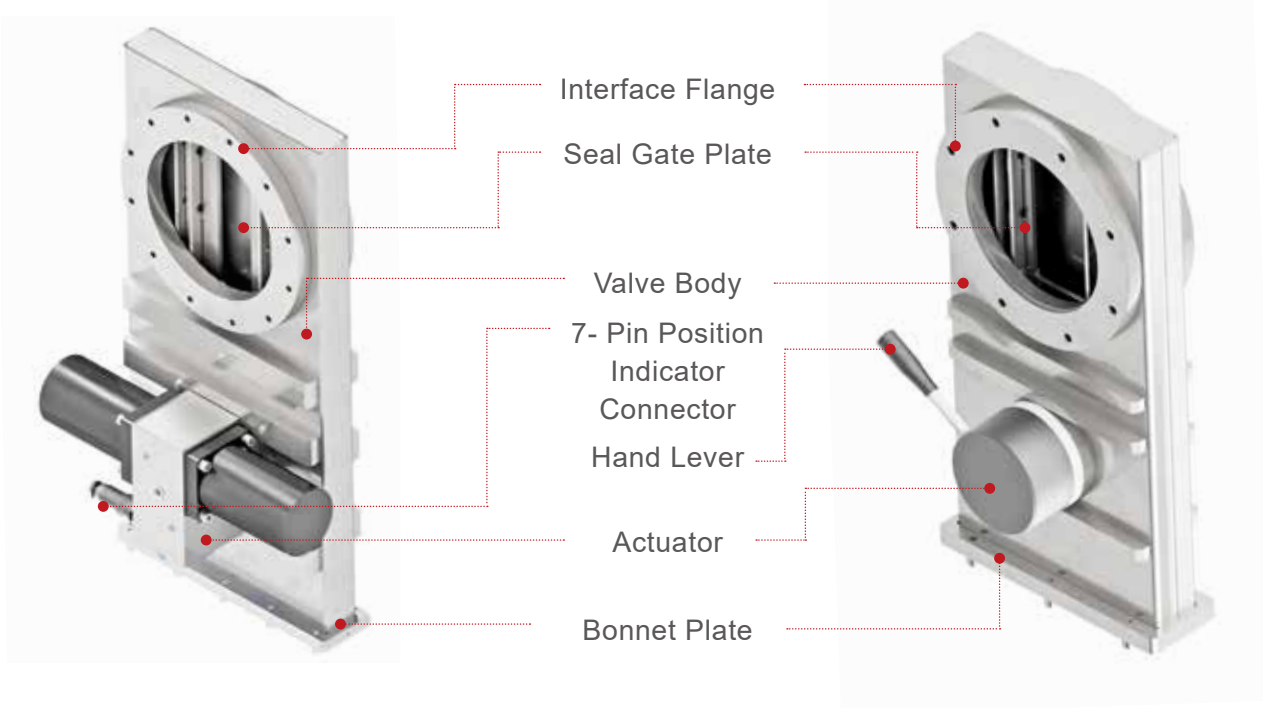

Product Application

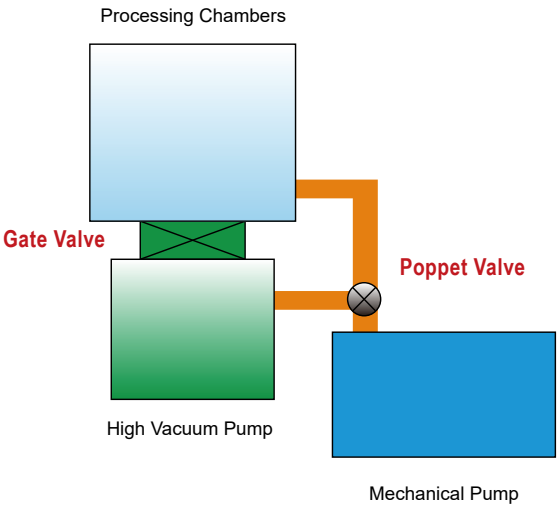

Schematic illustrating the gate valve in position between the two tubular chambers.

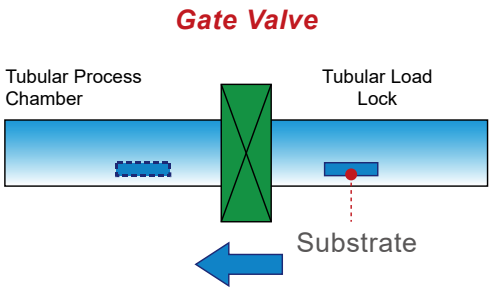

Substrate transfer from tubular load lock to tubular process chamber.

Valve's Operation Concept

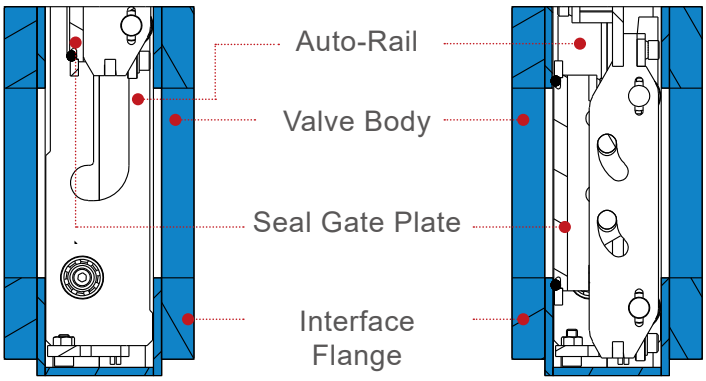

Open Position **Closed Position**

SMART Gate Valves

Technical Data for SMART Gate Valve

	High Vacuum
Feedthrough	O-ring shaft seal
Gate seal	FKM O-ring (Optional for FFKM)
Bonnet seal	FKM O-ring (Optional for FKM)
Operate pressure range	760 Torr ~ $1x10^{-8}$ Torr 1,013 mbar ~ $1.33X10^{-8}$ mbar 101 kPa ~ $1.33X10^{-9}$ kPa
Leak rate	1×10^{-9} Torr l/s, He 1.33×10^{-9} mbar l/s, He 1.33×10^{-10} kPa l/s, He
Cycle life	>200,000 Cycles
Temperature for valve body	0°C~250°C (32°F~482°F) Open, 0°C~200°C (32°F~392°F) Closed
Temperature for actuator	0°C~100°C (32°F~212°F)
Temperature for solenoid / position indicator	0°C~80°C 32°F~176°F
Bake temperature	100°C (212°F) for FKM gate seal
Valve body material	SS304 (Optional for SS316L)
Mechanism material	SS304
Actuator material	SS304, Aluminum
Mounting position	Any

Valve's Operation Data

Manual lever	180 degree angle
Pneumatic operating pressure	4 bar~ 8 bar 400 kpa~ 800 kpa 58 psi~ 116 psi
Position indicator (included as standard)	Visual indicator and micro switch with 7-pin connector
Solenoid (included as standard)	24V DC, standard option for 12V DC, 110V AC and 220V AC
Failure protection (included as standard)	SMART lock system (Valve position remains and locked)

Valve's Performance Data

	CF6”/ISO-F100	CF8”/ISO-F160	CF10”/ISO-F200	CF12”/ISO-F250
Maximum differential pressure against gate	<817 Torr <1,090 mbar < 109kpa			
Maximum differential pressure at opening	<22.5 Torr <30 mbar <3 kpa	<18.7 Torr <25 mbar <2.5 kpa	<15 Torr <20 mbar <2 kpa	<11.2 Torr <15 mbar <1.5 kpa
Pneumatic valve open / close time	1.5(s)	2(s)	2.5(s)	3(s)
Valve's conductance (molecular flow)	1,700(l/s)	5,100(l/s)	12,000(l/s)	22,000(l/s)

01. Manual Lever SMART Gate Valves, HV, CF Flange

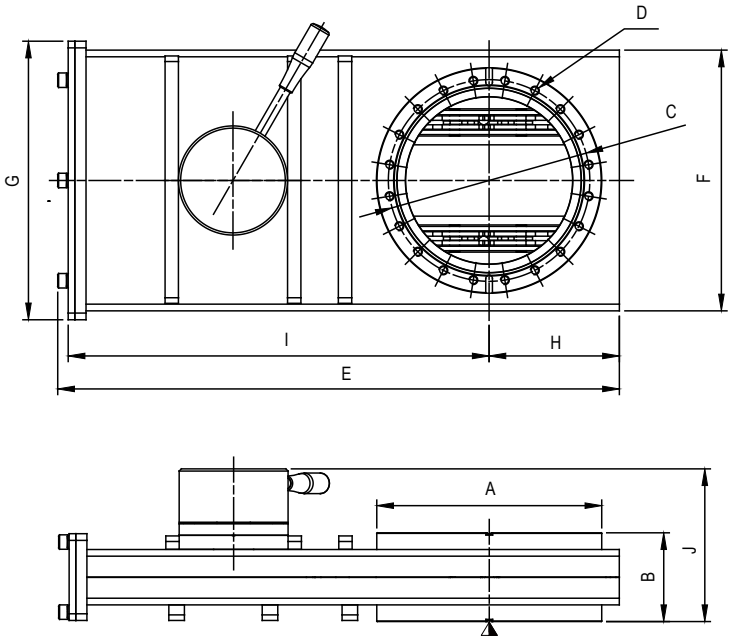

Material SS304

Part Number - Inch	Nominal I.D.	Thread D	A	B	C	E	F	G	H	I	J
SGVM-HV-CF450T	DN63 (2. 5”)	8x5/16- 24	114	80	92	300	142	154	71	222	123
SGVM-HV-CF600T	DN100 (4”)	16x5/16- 24	152	80	130	366	170	182	85	273	124
SGVM-HV-CF800T	DN160 (6”)	20x5/16- 24	202	80	181	504	234	250	117	378	138
SGVM-HV-CF1000T	DN200 (8”)	24x5/16- 24	253	90	232	692	316	334	158	525	174
SGVM-HV-CF1200T	DN250 (10”)	32x5/16- 24	304	110	284	792	368	390	184	597	191

Part Number - Metric	Nominal I.D.	Thread D	A	B	C	E	F	G	H	I	J
SGVM-HV-CF450M	DN63 (2. 5”)	8xM8x17dp	114	80	92	300	142	154	71	222	123
SGVM-HV-CF600M	DN100 (4”)	16xM8x12dp	152	80	130	366	170	182	85	273	124
SGVM-HV-CF800M	DN160 (6”)	20xM8x15dp	202	80	181	504	234	250	117	378	138
SGVM-HV-CF1000M	DN200 (8”)	24xM8x20dp	253	90	232	692	316	334	158	525	174
SGVM-HV-CF1200M	DN250 (10”)	32xM8x23dp	304	110	284	792	368	390	184	597	191

- Dimension in mm

02. Manual Lever SMART Gate Valves, HV, ISO-F Flange

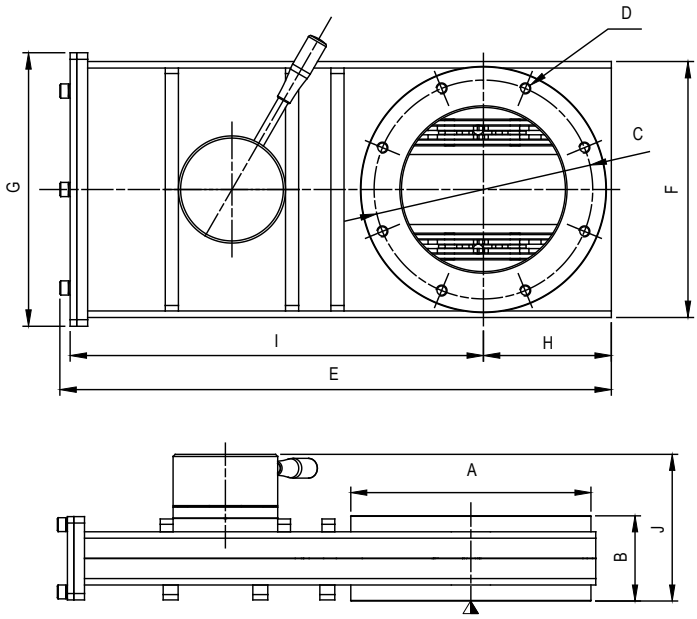

Material SS 304

Part Number- Metric	Nominal I.D.	Thread D	A	B	C	E	F	G	H	I	J
SGVM-HV-ISOF63	DN 63 (2.5")	4xM8x17dp	130	80	110	300	142	154	71	222	123
SGVM-HV-ISOF100	DN 100 (4")	8xM8x17dp	165	80	145	365	170	182	85	273	124
SGVM-HV-ISOF160	DN 160 (6")	8xM10x15dp	225	80	200	504	234	250	117	378	138
SGVM-HV-ISOF200	DN 200 (8")	12xM10x20dp	285	90	260	692	316	334	158	525	174
SGVM-HV-ISOF250	DN 250 (10")	12xM10x23dp	335	110	310	792	368	390	184	597	191

- Dimension in mm

03. Pneumatic SMART Gate Valves, HV, CF Flange

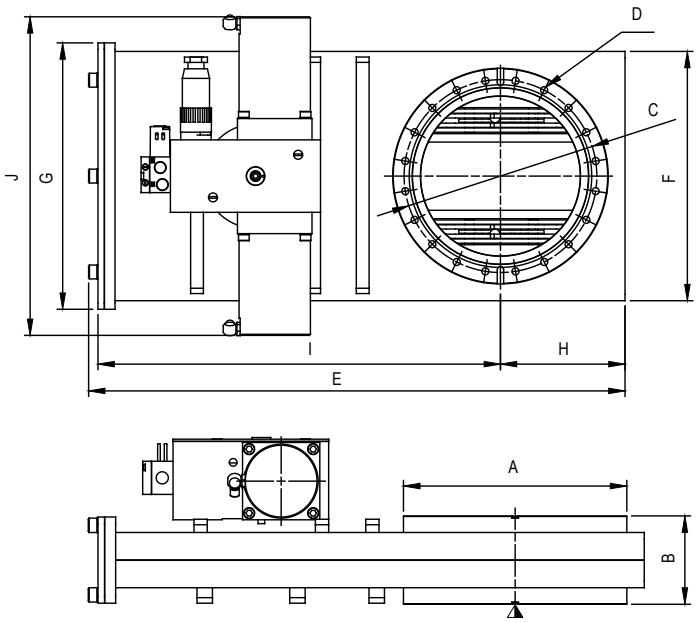

Material SS 304

Part Number- Inch	Nominal I.D.	Thread D	A	B	C	E	F	G	H	I	J
SGVP-HV-CF450T	DN 63 (2.5")	8x5/16-24	114	80	92	300	142	154	71	222	230
SGVP-HV-CF600T	DN 100 (4")	16x5/16-24	152	80	130	365	170	182	85	273	253
SGVP-HV-CF800T	DN 160 (6")	20x5/16-24	202	80	181	504	234	250	117	378	299
SGVP-HV-CF1000T	DN 200 (8")	24x5/16-24	253	90	232	692	316	334	158	525	388
SGVP-HV-CF1200T	DN 250 (10")	32x5/16-24	304	110	284	792	368	390	184	597	386

Part Number- Metric	Nominal I.D.	Thread D	A	B	C	E	F	G	H	I	J
SGVP-HV-CF450M	DN 63 (2.5")	8xM8X17dp	114	80	92	300	142	154	71	222	230
SGVP-HV-CF600M	DN 100 (4")	16xM8X17dp	152	80	130	365	170	182	85	273	253
SGVP-HV-CF800M	DN 160 (6")	20xM8X15dp	202	80	181	504	234	250	117	378	299
SGVP-HV-CF1000M	DN 200 (8")	24xM8X20dp	253	90	232	692	316	334	158	525	388
SGVP-HV-CF1200M	DN 250 (10")	32xM8X23dp	304	110	284	792	368	390	184	597	386

- Dimension in mm

04. Pneumatic SMART Gate Valves, HV, ISO-F Flange

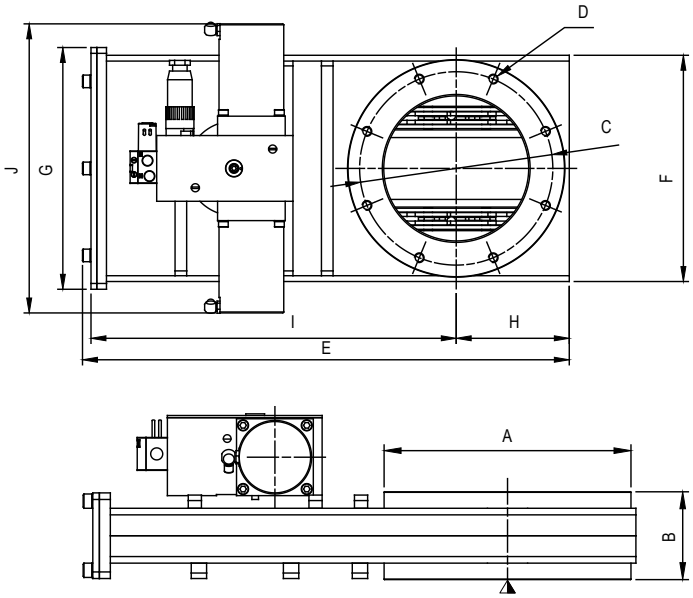

Material SS 304

Part Number- Metric	Nominal I.D.	Thread D	A	B	C	E	F	G	H	I	J
SGVP-HV-ISOF63	DN 63 (2.5")	4xM8X17dp	130	80	110	300	142	154	71	222	230
SGVP-HV-ISOF100	DN 100 (4")	8xM8X17dp	165	80	145	365	170	182	85	273	253
SGVP-HV-ISOF160	DN 160 (6")	8xM10X15dp	225	80	200	504	234	250	117	378	299
SGVP-HV-ISOF200	DN 200 (8")	12xM10X20dp	285	90	260	692	316	334	158	525	388
SGVP-HV-ISOF250	DN 250 (10")	12xM10X23dp	335	110	310	792	368	390	184	597	386

- Dimension in mm

In-Axis Gate Valves

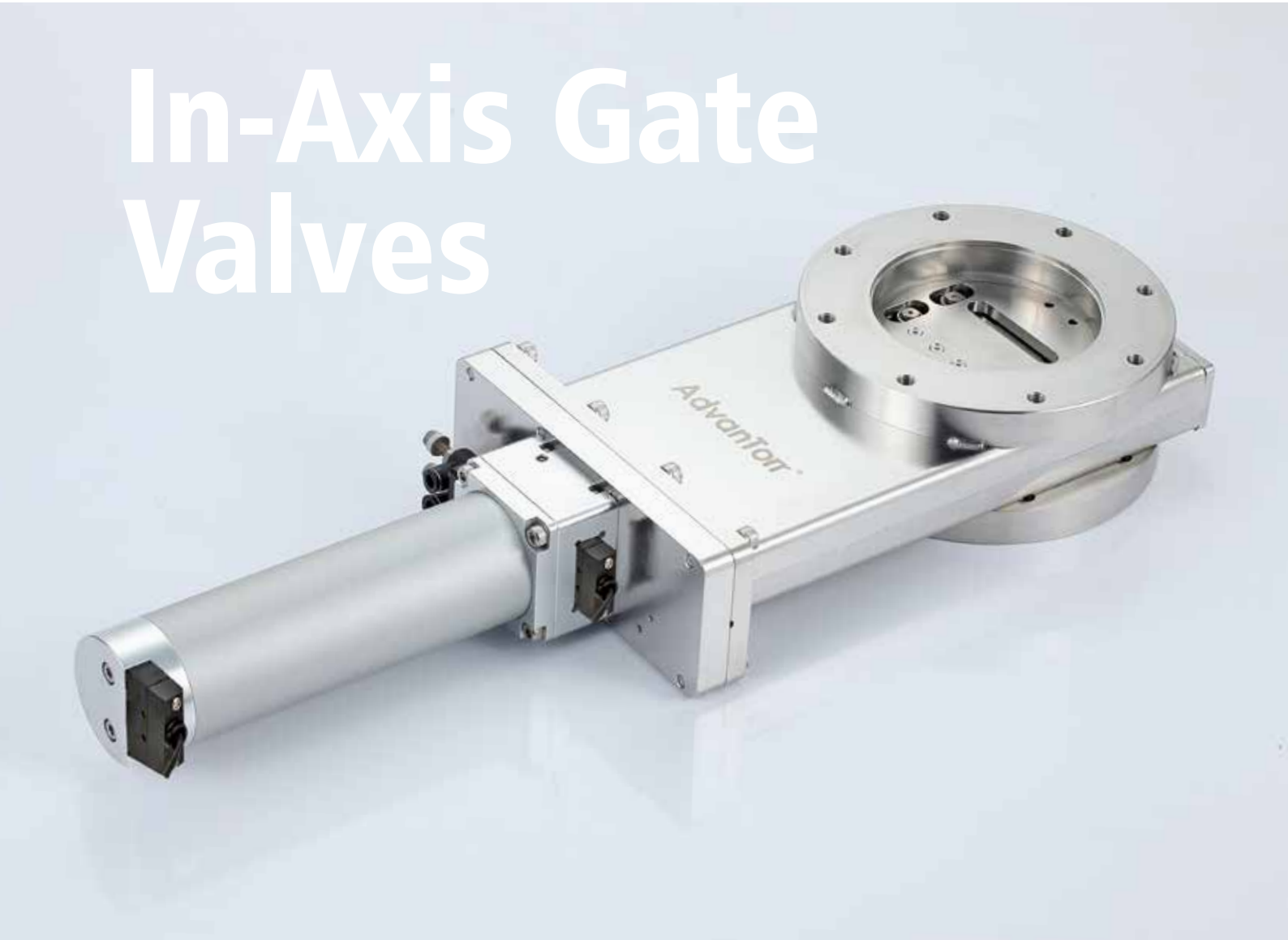

In-Axis Gate Valves

AdvanTorr® "In-Axis" series of SMART gate valves features a vertically oriented drive mechanism with pneumatic or manual actuation, making them an excellent choice when a small footprint is necessary within a system. These valves provide a reliable and efficient solution for applications where space is at a premium.

Features

- Edge Welded Bellows Sealing: Prevents any leakage, ensuring the system remains contamination free
- Low Particle Generation: Ideal for use in clean environments
- Long Service Life: Reduced maintenance and replacement costs
- Easy Operation: Smooth and reliable opening and closing actions

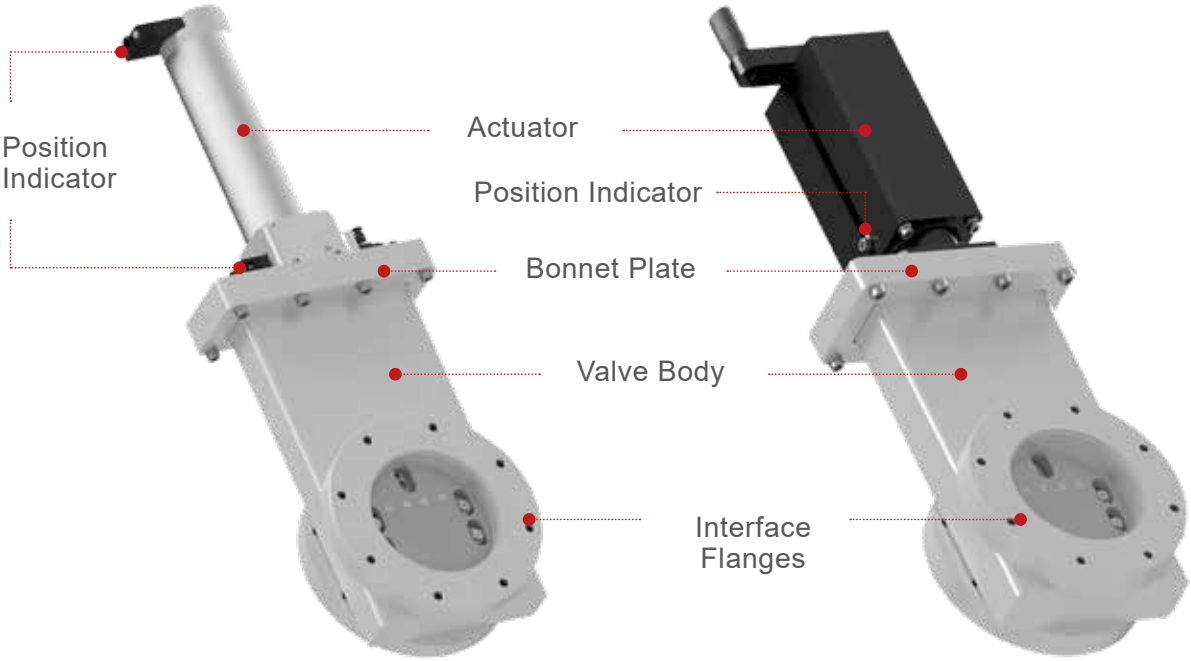

Technical Data for In- Axis Gate Valve

	Ultra High Vacuum	High Vacuum
Feedthrough	Welded bellows in AM350	O-ring shaft seal
Gate seal	FKM O-ring (Optional for FFKM)	FKM O-ring (Optional for FFKM)
Bonnet seal	OFHC metal gasket	FKM O-ring (Optional for FFKM)
Operate pressure range	760 Torr ~ $1x10^{-10}$ Torr 1,013 mbar~$1.33x10^{-10}$ mbar 101 kPa~ $1.33x10^{-11}$ kPa	760 Torr ~ 1×10^{-8} Torr 1,013 mbar ~ 1.33×10^{-8} mbar 101 kPa ~ 1.33×10^{-9} kPa
Leak rate	1×10^{-10} Torr l/s, He $1.33x10^{-10}$ mbar l/s, He $1.33x10^{-11}$ kPa l/s, He	1×10^{-9} Torr l/s, He 1.33×10^{-9} mbar l/s, He 1.33×10^{-10} kPa l/s, He
Cycle life	>50,000 Cycles	>200,000 Cycles
Temperature for valve body	0°C~250°C (32°F~482°F) Open, 0°C~200°C (32°F~392°F) Closed	
Temperature for actuator	0°C~100°C (32°F~212°F)	
Temperature for solenoid / position indicator	0°C~80°C 32°F~176°F	
Bake temperature	200°C (392°F) for FKM gate seal	100°C (212°F) for FKM gate seal
Valve body material	SS304 (Optional for SS316L)	
Mechanism material	SS304	
Actuator material	SS304, Aluminum	
Mounting position	Any	

Valve's operation data

Pneumatic operating pressure	4 bar~ 8 bar / 400 kpa~ 800 kpa / 58 psi~ 116 psi
Position indicator (included as standard)	Visual indicator and micro switch with 7-pin connector
Solenoid (included as standard)	24V DC, standard option for 12V DC, 110V AC and 220V AC
Failure protection (included as standard)	SMART lock system (Valve position remains and locked)

Valve's performance data

	CF6”/ISO-F100	CF8”/ISO-F160	CF10”/ISO-F200	CF12”/ISO-F250
Maximum differential pressure against gate	<817 Torr <1,090 mbar < 109kpa			
Maximum differential pressure at opening	<22.5 Torr <30 mbar <3 kPa	<18.7 Torr <25 mbar <2.5 kPa	<15 Torr <20 mbar <2 kPa	<11.2 Torr <15 mbar <1.5 kPa
Pneumatic valve open / close time	1.5(s)	2(s)	2.5(s)	3(s)
Valve's conductance (molecular flow)	1,700(l/s)	5,100(l/s)	12,000(l/s)	22,000(l/s)

In-Axis Gate Valves

01. Pneumatic In-Axis Gate Valves, HV ISO Flange

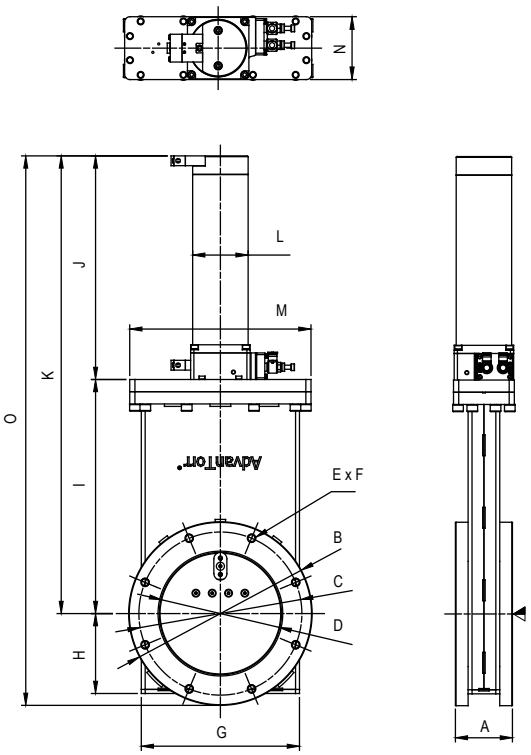

Material SS 304

Part Number	Tube OD	ISO-F	A	B	C	D	EXF	G	H
KAGVP-HV-ISO63M	2.5“	ISO63	70	130	110	70	4XM8	112	54
KAGVP-HV-ISO80M	3“	ISO80	70	145	125	76	8XM8	121	61
KAGVP-HV-ISO100M	4"	ISO100	70	165	145	100	8XM8	142	73
KAGVP-HV-ISO160M	6"	ISO160	70	225	200	150	8XM10	194	98
KAGVP-HV-ISO200M	8"	ISO200	80	285	260	200	12XM10	244	121

Part Number	Tube OD	ISO-F	I	J	K	L	M	N	O
KAGVP-HV-ISO63M	2.5“	ISO63	160	186	346	55	128	70	411
KAGVP-HV-ISO80M	3“	ISO80	175	199	374	55	157	70	446
KAGVP-HV-ISO100M	4"	ISO100	219	222	440	55	178	70	523
KAGVP-HV-ISO160M	6"	ISO160	287	274	561	68	222	75	673
KAGVP-HV-ISO200M	8"	ISO200	363	325	687	75	279	75	830

- Dimension in mm

02. Pneumatic In-Axis Gate Valves, HV ISO Flange

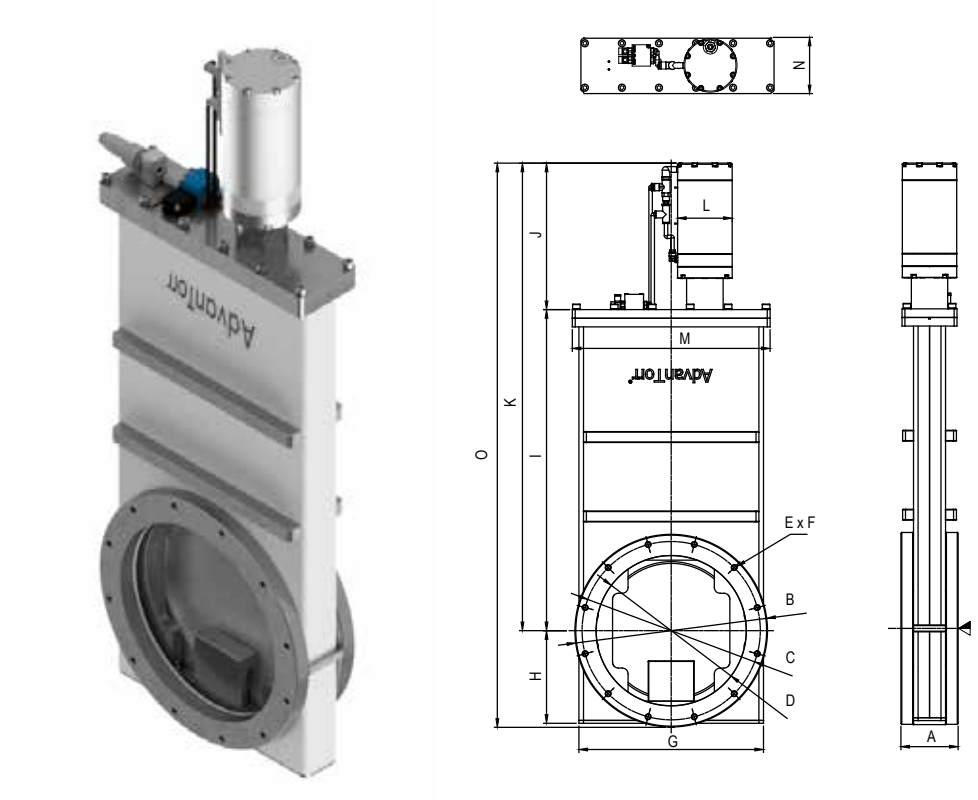

Material SS 304

Part Number	Tube OD	ISO-F	A	B(OD)	C(PCD)	D(ID)	EXF	G	H
KAGVP-HV-ISO250M	10"	ISO250	100	335	310	261	12XM10	321	161
Part Number	Tube OD	ISO-F	I	J	K	L	M	N	O
KAGVP-HV-ISO250M	10"	ISO250	558	255	813	95	344	96	981

- Dimension in mm

03. Pneumatic In-Axis Gate Valves, UHV CF Flange

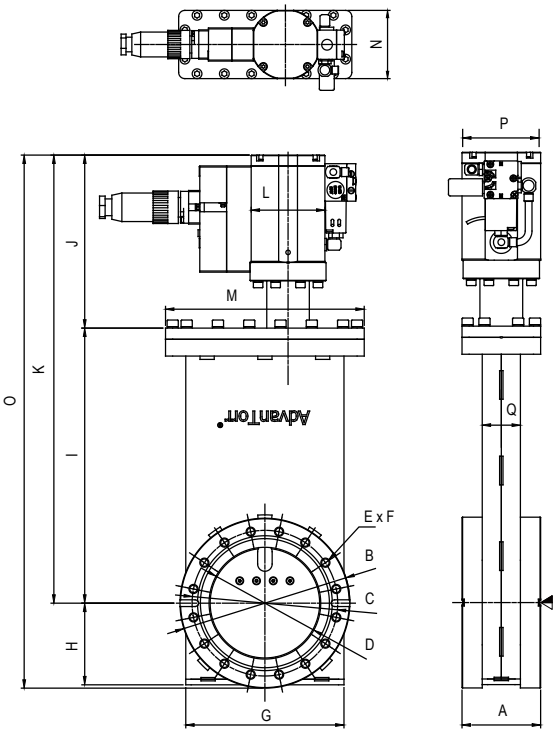

Material SS 304

Part Number	Tube OD	CF-F	A	B(OD)	C(PCD)	D(ID)	EXF	G	H	I
KAGVP-UHV-CF100M	4"	CF100	70	152	130	100	16XM8	142	73	246
KAGVP-UHV-CF160M	6"	CF160	70	202	181	150	20XM8	194	98	336
KAGVP-UHV-CF200M	8"	CF200	80	253	232	200	24XM8	244	121	429

Part Number	Tube OD	CF-F	J	K	L	M	N	O	P	Q
KAGVP-UHV-CF100M	4"	ISO100	155	401	66	178	70	477	70	34
KAGVP-UHV-CF160M	6"	ISO160	185	521	76	222	75	622	70	39
KAGVP-UHV-CF200M	8"	ISO200	191	620	86	280	80	748	80	41

- Dimension in mm

04. Pneumatic In-Axis Gate Valves, UHV CF Flange

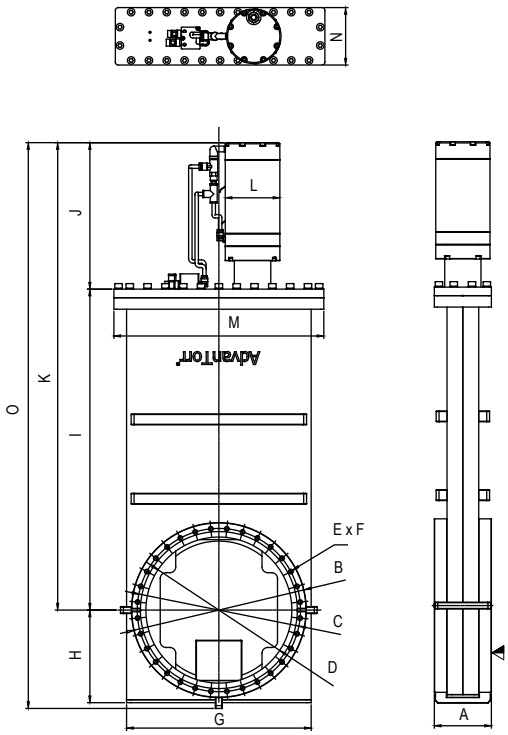

Material SS 304

Part Number	Tube OD	CF-F	A	B(OD)	C(PCD)	D(ID)	EXF	G	H	I
KAGVP-UHV-CF250M	10"	CF250	100	304	284	254	32xM8	321	161	558

Part Number	Tube OD	CF-F	J	K	L	M	N	O	P	Q
KAGVP-UHV-CF250M	10"	CF250	255	813	95	365	100	984	94	56

- Dimension in mm

05. Manual In-Axis Gate Valves, HV ISO Flange

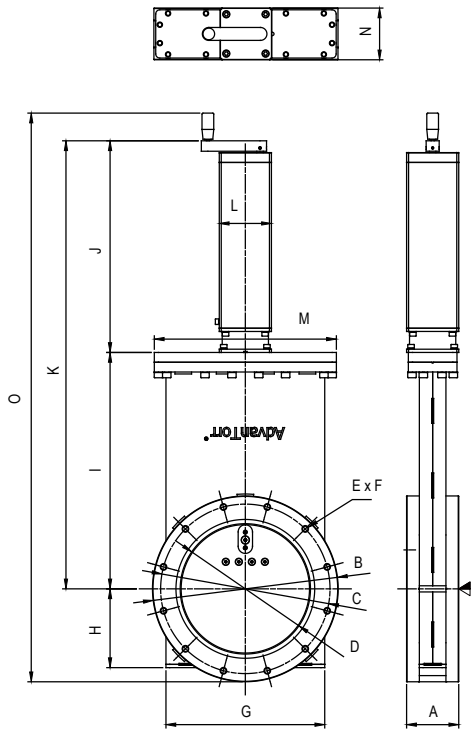

Material SS 304

Part Number	Tube OD	ISO-F	A	B(OD)	C(PCD)	D(ID)	EXF	G	H
KAGVM-HV-ISO63M	2.5"	ISO63	70	130	110	70	4XM8	112	54
KAGVM-HV-ISO80M	3"	ISO80	70	145	125	76	8XM8	121	61
KAGVM-HV-ISO100M	4"	ISO100	70	165	145	100	8XM8	142	73
KAGVM-HV-ISO160M	6"	ISO160	70	225	200	150	8XM10	194	98
KAGVM-HV-ISO200M	8"	ISO200	80	285	260	200	12XM10	244	121

Part Number	Tube OD	ISO-F	I	J	K	L	M	N	O
KAGVM-HV-ISO63M	2.5"	ISO63	160	190	350	70	128	70	458
KAGVM-HV-ISO80M	3"	ISO80	175	204	379	70	157	70	494
KAGVM-HV-ISO100M	4"	ISO100	219	227	445	70	178	70	570
KAGVM-HV-ISO160M	6"	ISO160	287	286	573	75	222	75	728
KAGVM-HV-ISO200M	8"	ISO200	363	330	692	80	279	80	877

- Dimension in mm

06. Manual In-Axis Gate Valves, HV ISO Flange

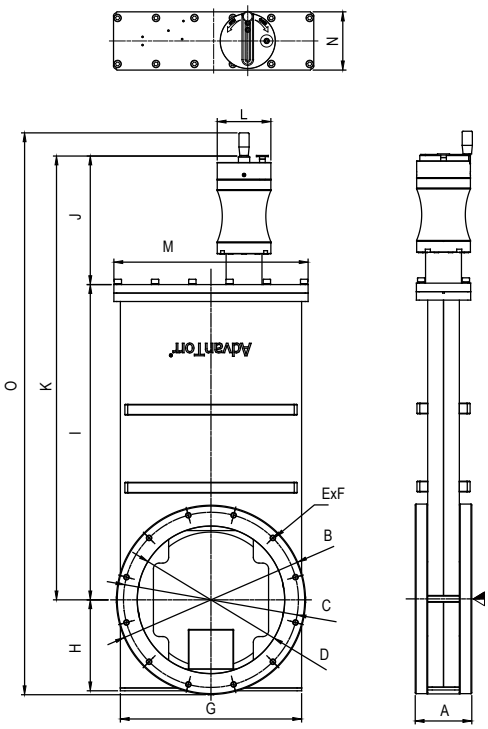

Material SS 304

Part Number	Tube OD	ISO-F	A	B(OD)	C(PCD)	D(ID)	EXF	G	H
KAGVM-HV-ISO250M	10"	ISO250	100	335	310	261	12XM10	321	161
Part Number	**Tube OD**	**ISO-F**	**I**	**J**	**K**	**L**	**M**	**N**	**O**
KAGVM-HV-ISO250M	10"	ISO250	558	216	774	95	344	96	995

- Dimension in mm

07. Manual In-Axis Gate Valves, UHV, CF Flanges

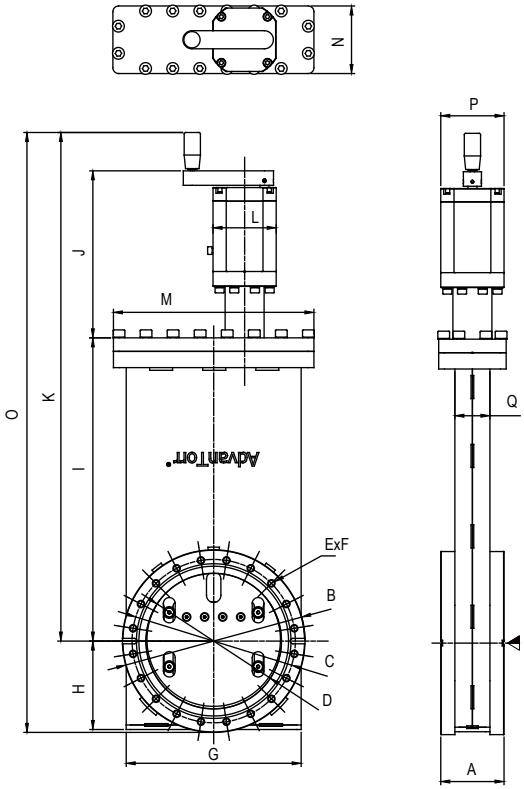

Material SS 304

Part Number	Tube OD	CF	A	B(OD)	C(PCD)	D(ID)	EXF	G	H	I
KAGVM-UHV-CF100M	4"	CF100	70	152	130	100	16XM8	142	73	246
KAGVM-UHV-CF160M	6"	CF160	70	202	181	150	20XM8	194	98	336
KAGVM-UHV-CF200M	8"	CF200	80	253	232	200	24XM8	244	121	429

Part Number	Tube OD	CF	J	K	L	M	N	O	P	Q
KAGVM-UHV-CF100M	4"	CF100	176	463	68	178	70	540	70	34
KAGVM-UHV-CF160M	6"	CF160	190	567	70	222	75	670	70	39
KAGVM-UHV-CF200M	8"	CF200	208	678	70	280	80	807	70	41

- Dimension in mm

08. Manual In-Axis Gate Valves, UHV, CF Flanges

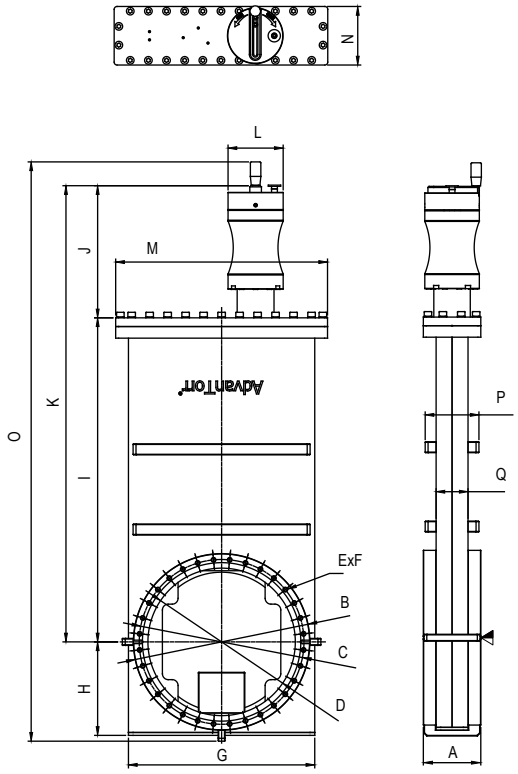

Material SS 304

Part Number	Tube OD	CF	A	B(OD)	C(PCD)	D(ID)	EXF	G	H	I
KAGVM-UHV-CF250	10"	CF250	100	304	284	254	32xM8	321	161	558
Part Number	**Tube OD**	**CF**	**J**	**K**	**L**	**M**	**N**	**O**	**P**	**Q**
KAGVM-UHV-CF250	10"	CF250	228	786	95	365	100	998	94	56

- Dimension in mm

01. Pneumatic In-Axis Gate Valves, UHV CF Flange

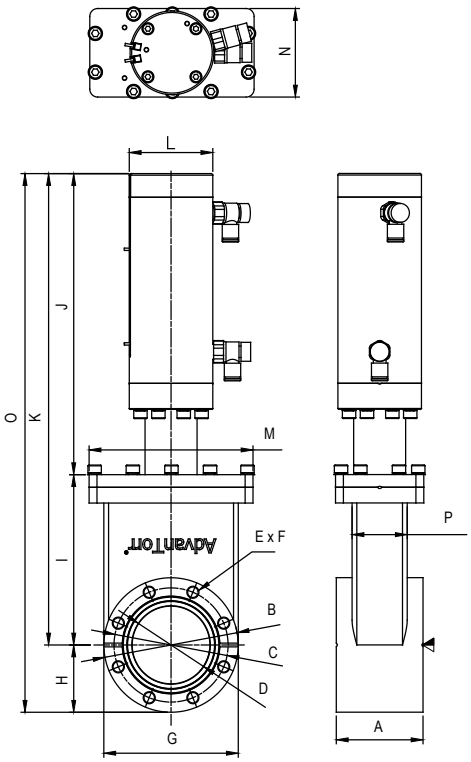

Material SS 304

Part Number	Tube OD	CF	A	B(OD)	C(PCD)	D(ID)	EXF	G	H
MGVP-UHV-CF275M	1.5"	40	55	69	59	40	6XM6	85	43
MGVP-UHV-CF338M	2"	50	55	85	72	49	8XM8	85	43

Part Number	Tube OD	CF	I	J	K	L	M	N	O	P
MGVP-UHV-CF275M	1.5"	40	108	191	299	53	104	56	342	35
MGVP-UHV-CF338M	2"	50	108	191	299	53	104	56	342	35

- Dimension in mm

02. Pneumatic In-Axis Gate Valves, HV KF Flange

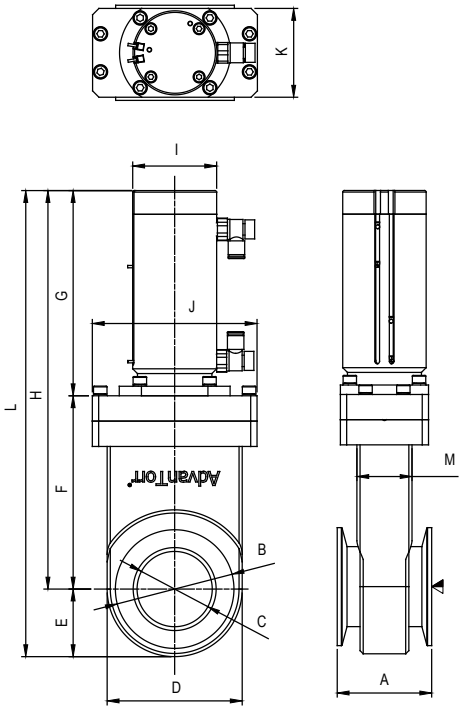

Material SS 304

Part Number	Tube OD	KF	A	B(OD)	C(ID)	D	E	F
MGVP-HV-KF40	1.5"	40	60	55	41	85	43	122
MGVP-HV-KF50	2"	50	60	75	48	85	43	122

Part Number	Tube OD	KF	G	H	I	J	K	L	M
MGVP-HV-KF40	1.5"	40	130	252	53	104	56	294	35
MGVP-HV-KF50	2"	50	130	252	53	104	56	294	35

- Dimension in mm

03. Manual In-Axis Gate Valves, HV KF Flange (Bellows)

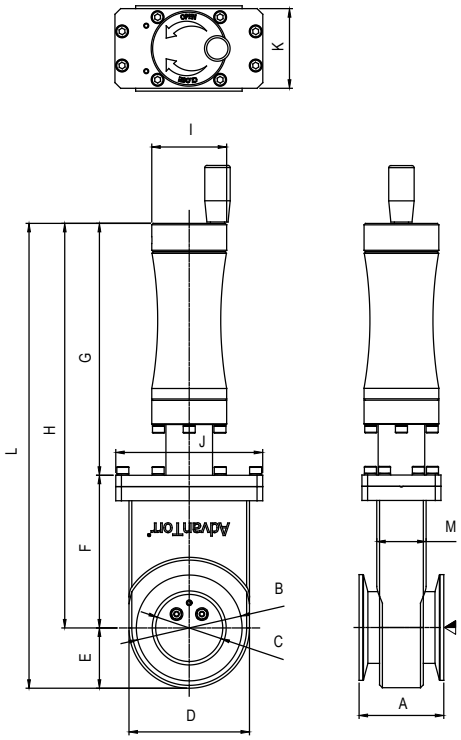

Material SS 304

Part Number	Tube OD	KF	A	B	C	D	E	F	G
MGVM-HV-KF40	1.5"	40	60	55	41	85	43	108	178
MGVM-HV-KF50	2"	50	60	75	48	85	43	108	178

Part Number	Tube OD	KF	H	I	J	K	L	M
MGVM-HV-KF40	1.5"	40	286	53	104	56	370	35
MGVM-HV-KF50	2"	50	286	53	104	56	370	35

- Dimension in mm

04. Manual In-Axis Gate Valves, HV KF Flange

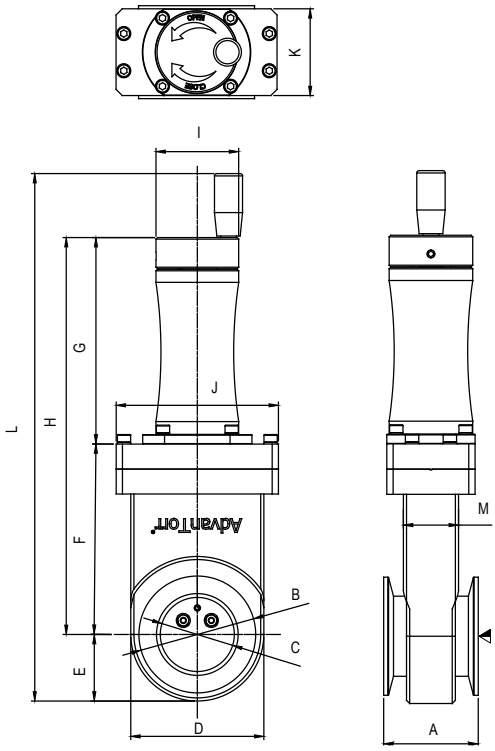

Material SS 304

Part Number	Tube OD	KF	A	B(OD)	C(ID)	D	E	F	G
MGVP-HV-KF-275	1.5"	40	60	55	41	85	43	122	132
MGVP-HV-KF-338	2"	50	60	75	48	85	43	122	132

Part Number	Tube OD	KF	H	I	J	K	L	M
MGVP-HV-KF-275	1.5"	40	254	53	104	56	338	35
MGVP-HV-KF-338	2"	50	254	53	104	56	338	35

- Dimension in mm

05. Manual In-Axis Gate Valves, UHV CF Flange

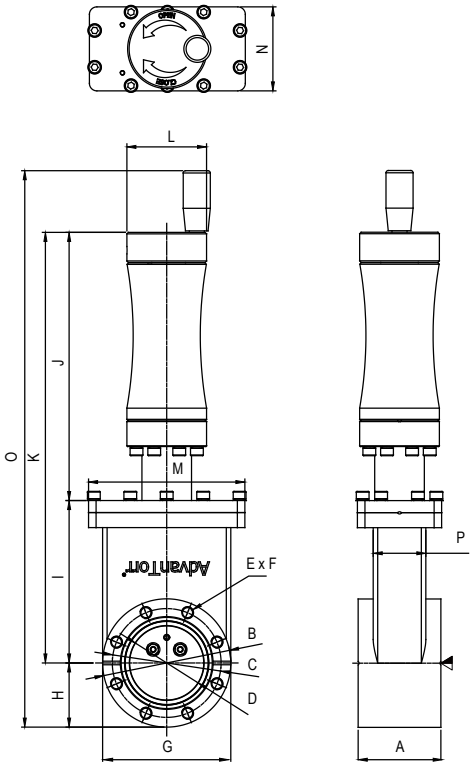

Material SS 304

Part Number	Tube OD	CF	A	B(OD)	C(PCD)	D(ID)	EXF	G	H
MGVP-UHV-CF-275	1.5"	40	55	69	59	40	6XM6	85	43
MGVP-UHV-CF-338	2"	50	55	85	72	49	8XM8	85	43

Part Number	Tube OD	CF	I	J	K	L	M	N	O	P
MGVP-UHV-CF-275	1.5"	40	108	178	286	53	104	56	370	35
MGVP-UHV-CF-338	2"	50	108	178	286	53	104	56	370	35

- Dimension in mm

Aluminum Gate Valves

Aluminum Gate Valves

Technical Data for Aluminum Gate Valve

	High Vacuum
Feedthrough	Rotary type feedthrough
Gate seal	FKM O-ring (Optional for FFKM)
Bonnet seal	FKM O-ring
Operate pressure range	DN100~DN200 $1x10^{-7}$ mbar to 1.6 bar DN250 $1x10^{-7}$ mbar to 1.2 bar
Leak rate	$1x10^{-9}$ mbar l/s^{-1}
Cycle life	200,000 / 100,000 Cycles
Temperature for valve body	≦ 120°C(248°F)
Temperature for actuator	≦ 80°C(176°F)
Temperature for solenoid / position indicator	≦ 50°C(122°F)
Bake temperature	100°C (212°F) for FKM gate seal
Valve body material	Aluminum
Mechanism material	SS304, Aluminum
Actuator material	Aluminum
Mounting position	Any

Valve's Operation Data

Pneumatic operating pressure	4 bar~7 bar
Position indicator (included as standard)	Visual indicator and micro switch with 7-pin connector
Solenoid (included as standard)	24V DC, standard option for 12V DC, 110V AC and 220V AC
Failure protection (included as standard)	Roller Lock (Valve position remains closed)

Valve's Performance Data

	ISO-F100	ISO-F160	ISO-F200	ISO-F250
Maximum differential pressure against gate	<1,200 Torr <1,600 mbar <160 kPa	<1200 Torr <1600 mbar <160 kPa	<1200 Torr <1600 mbar <160 kPa	<900 Torr <1,200 mbar <120 kPa
Maximum differential pressure at opening	<22.5 Torr / <30 mbar / <3 kPa			
Pneumatic valve open / close time	2(s)	2 (s)	3 (s)	5(s)
Valve's conductance (molecular flow)	2,000 (l/s)	6,000 (l/s)	12,000 (l/s)	22,000 (l/s)

Key Valve Parts

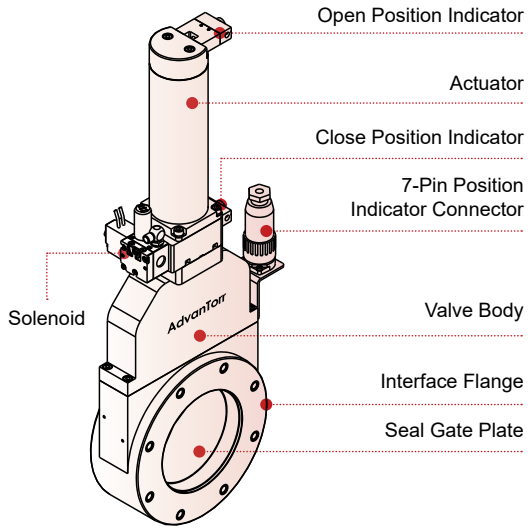

Valve's Operation Concept

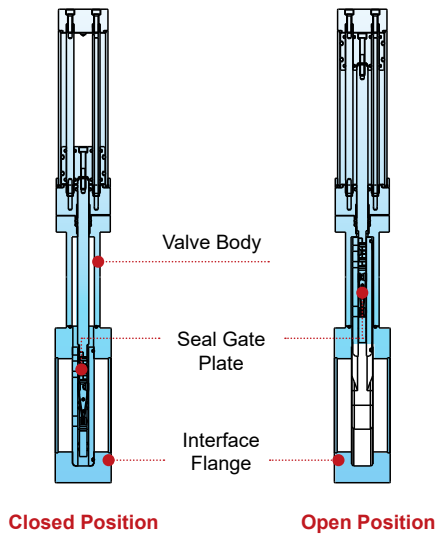

01. Pneumatic Aluminum Gate Valves

Figure 1

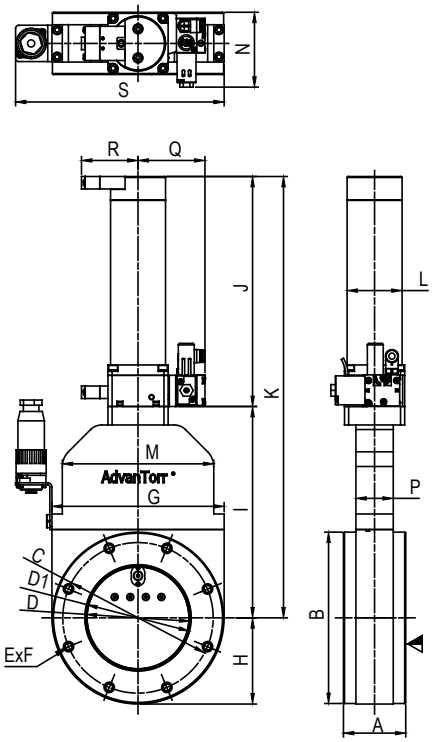

Figure 2

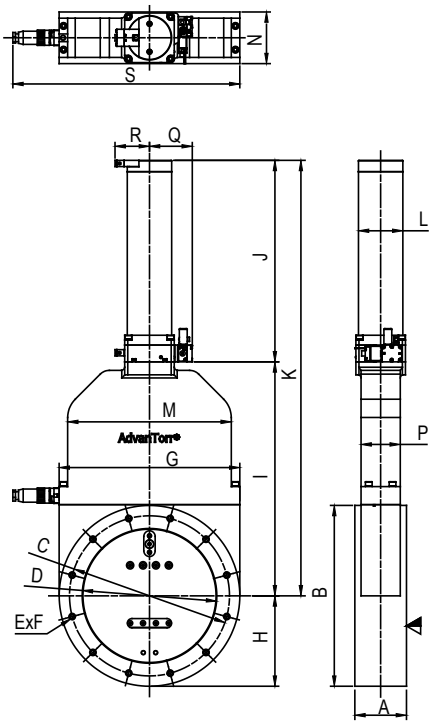

Material Aluminum

Part Number	Tube OD	Figure	A	B	C(PCD)	D(ID)	D1	E x F	G	H
AGV-HV-ISOF100	4”	1	60	165	145	100	102	8xM8X12dp	166	83
AGV-HV-ISOF160	6”	1	70	235	200	150	153	8xM10x16dp	237	119
AGV-HV-ISOF200	8”	1	80	288	260	200	213	12xM10x16dp	288	144
AGV-HV-ISOF250	10”	2	100	350	310	261	-	12xM10x16dp	350	175

Part Number	Tube OD	Figure	I	J	K	L	M	N	P	Q	R	S
AGV-HV-ISOF100	4”	1	204	222	425	53	146	72	36	65	55	201
AGV-HV-ISOF160	6”	1	280	267	547	65	192	78	58	70	61	319
AGV-HV-ISOF200	8”	1	364	325	688	75	245	83	66	72	62	323
AGV-HV-ISOF250	10”	2	453	390	843	86	317	100	76	83	67	440

- Dimension in mm

Vacuum Poppet Valves

Product Introduction

The **AdvanTorr**® Isolation Poppet Valves are designed to act as "shut-off" devices in roughing and fore lines. They prevent the risk of contamination and back streaming in vacuum systems.

The **AdvanTorr**® Poppet Valves are a reliable and efficient solution and is widely used in high-tech industries such as semiconductor manufacturing and analytical instruments.*

Product Features

- Available in a wide range of sizes from ¾" to 10" orifice.
- > 1 million cycles between service intervals
- Compact, low profile, small footprint design
- Actuator Options
  - Manual Actuator (up to ¾" to 2.0")
  - Single Acting Pneumatic Actuator with spring to 'closed' during power / air failure (sizes 3/4" to 2.0")
  - Double Acting Pneumatic Actuator (sizes 2 ½" to 10")
- High purity, dry with a self-lubricating mechanism, significantly reduces particle generation

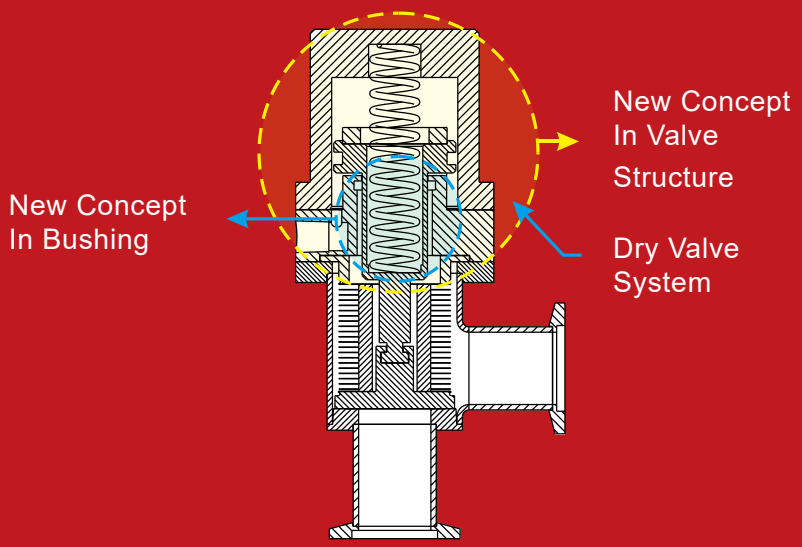

Product Application

Poppet valves in roughing and fore lines.

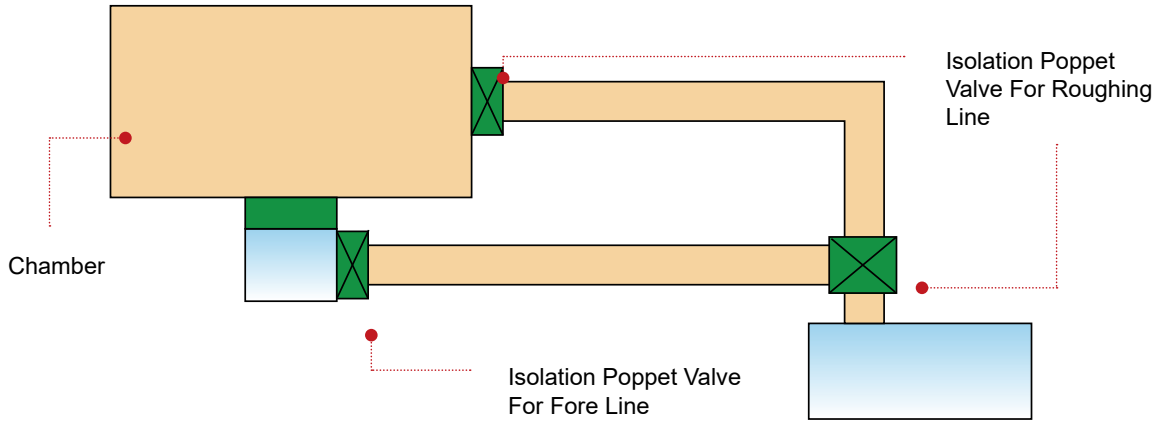

Valve's Operation Concept

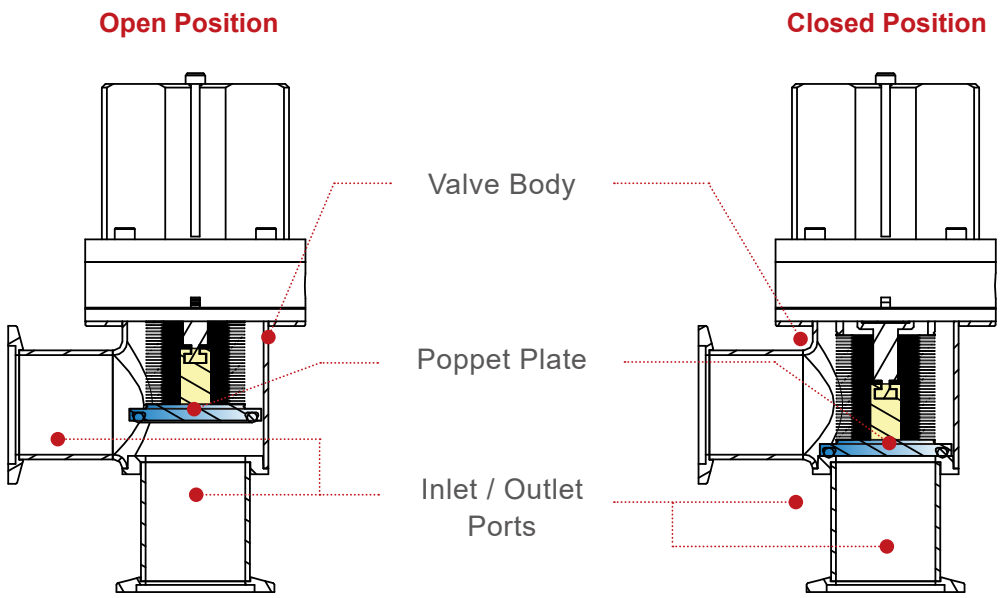

Vacuum Poppet Valves

Key Valve Parts- Single Acting

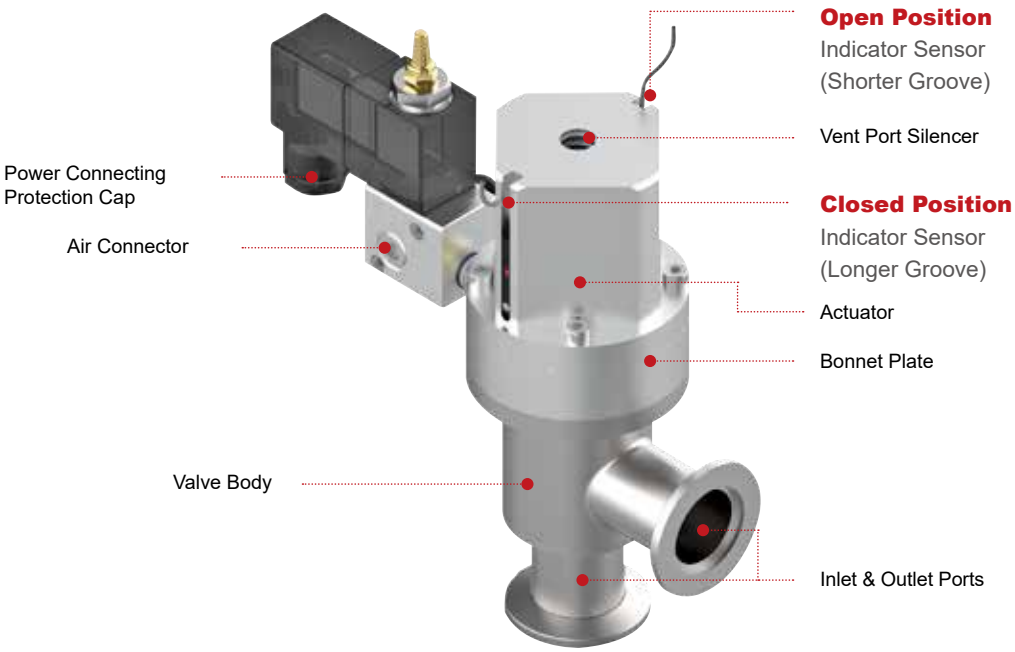

Technical Data For Poppet Angle / Inline Valves

	Ultra High Vacuum	High Vacuum	High Vacuum
Feedthrough	Welded bellows in AM350	Welded bellows in AM350	O-ring shaft seal
Gate seal	FKM O-ring (Optional for FFKM)	FKM O-ring (Optional for FFKM)	FKM O-ring (Optional for FFKM)
Bonnet seal	OFHC metal gasket	FKM	FKM
Operate pressure range	760 Torr ~ $1x10^{-10}$ Torr ATM~$1.33x10^{-10}$ mbar 101 kPa~ $1.33x10^{-11}$ kPa	760 Torr ~ $1x10^{-8}$ Torr ATM~$1.33x10^{-8}$ mbar 101 kPa~ $1.33x10^{-9}$ kPa	760 Torr ~ $1x10^{-8}$ Torr ATM mbar~$1.33x10^{-8}$ mbar 101 kPa~ $1.33x10^{-9}$ kPa
Leak rate	1×10^{-10} Torr l/s, He $1.33x10^{-10}$ mbar l/s, He $1.33x10^{-11}$ kPa l/s, He	1×10^{-9} Torr l/s, He $1.33x10^{-9}$ mbar l/s, He $1.33x10^{-10}$ kPa l/s, He	1×10^{-9} Torr l/s, He $1.33x10^{-9}$ mbar l/s, He $1.33x10^{-10}$ kPa l/s, He
Cycle life	>1,000,000 Cycles		
Temperature for valve body	0°C~250°C (32°F~482°F) Open, 0°C~200°C (32°F~392°F) Closed		
Temperature for actuator	0°C~100°C (32°F~212°F)		
Temperature for solenoid/ position indicator	0°C~80°C 32°F~176°F		
Bake temperature	200°C (392°F) for FKM gate seal	100°C (212°F) for FKM gate seal	
Valve body material	SS304L (Optional for SS316L)		
Mechanism material	SS304L		
Actuator material	Aluminum		
Mounting position	Any		

Valve's Operation Data

Pneumatic operating pressure	4 bar~ 5.5 bar
Position indicator (optional)	Optional magnetic sensor with wire end
Solenoid (optional)	Optional for 24V DC, standard
Failure protection (included as standard)	Spring closed for KF16, KF25, KF40, KF50, CF1.33", CF2.12", CF2.75", CF3.38"

Key Valve Parts- Double Acting

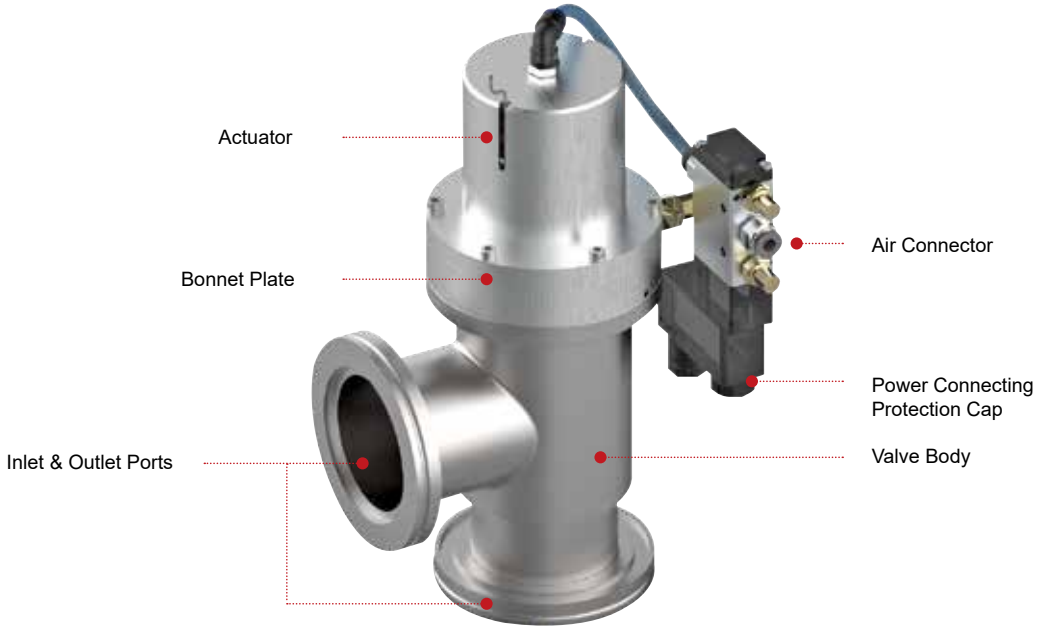

Valve's Performance Data

	KF16/CF1.33"	KF25/CF2.12"	KF40/CF2.75"	KF50/CF3.38"	ISO-K63/CF4.5"
Maximum differential pressure against gate	2,025 Torr 2,700 mbar 270 kpa	1,800 Torr 2,400 mbar 240 kpa	1,725 Torr 2,300 mbar 230 kpa	1,500 Torr 2,000 mbar 200 kpa	2,925 Torr 3,900 mbar 390 kpa
Maximum differential pressure at opening			1,500 Torr 2,000 mbar 200 kpa		
Pneumatic valve open / close time(s)	0.3/0.5	0.3/0.5	0.5/0.8	0.5/0.8	0.7/0.7
Valve's conductance angle type (molecular flow)	6(l/s)	15(l/s)	48(l/s)	82(l/s)	170(l/s)
Valve's conductance inline type (molecular flow)	5(l/s)	12(l/s)	44(l/s)	66(l/s)	135(l/s)

	ISO-K80	ISO-K100/CF6"	ISO-K160/CF8"	ISO-K200	ISO-K250
Maximum differential pressure against gate	2,925 Torr 3,900 mbar 390 kpa	2,925 Torr 3,900 mbar 390 kpa	3,300 Torr 4,400 mbar 440 kpa	3,300 Torr 4,400 mbar 440 kpa	3,300 Torr 4,400 mbar 440 kpa
Maximum differential pressure at opening			1,500 Torr 2,000 mbar 200 kpa		
Pneumatic valve open / close time(s)	0.7/0.7	0.8/0.8	1.5/1.5	2.0/2.0	2.0/2.0
Valve's conductance angle type (molecular flow)	220(l/s)	490(l/s)	1090(l/s)	1,600(l/s)	2,650(l/s)
Valve's conductance inline type (molecular flow)	184(l/s)	406(l/s)	N/A	N/A	N/A

Vacuum Poppet Valves

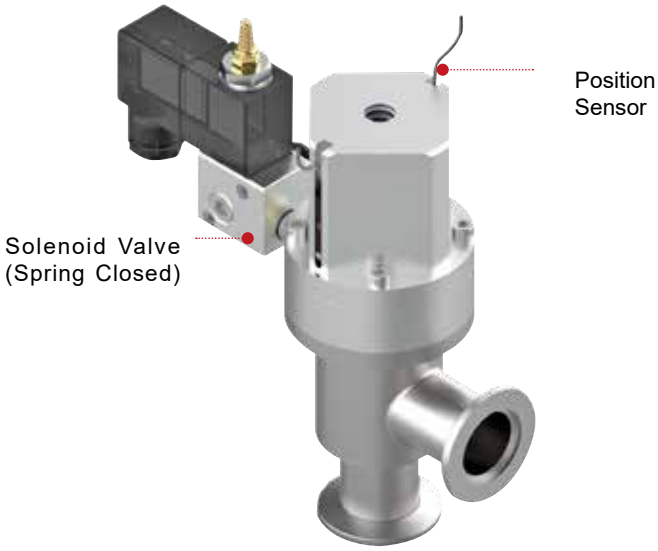

Single Acting

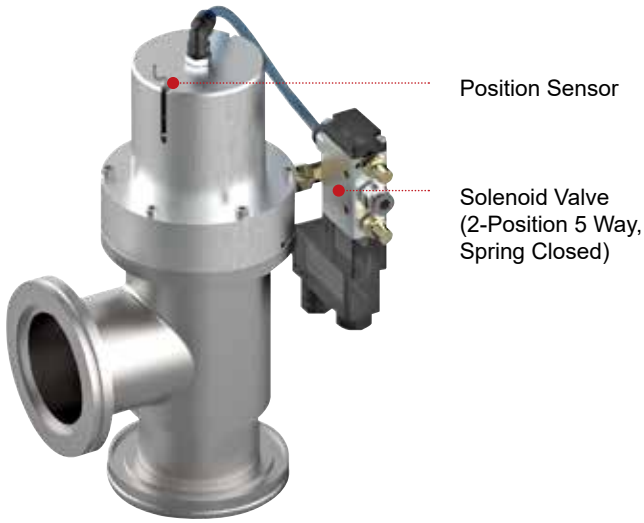

Double Acting

01. ACCESSORIES
Position Sensor with LED Light Indication

Part Number	Size	Specification
PS-A-R	KF10~KF50 ISO63~ISO250	Reed type with trim assembly
PS-A-N	ISO63~ISO250 KF10~KF50	NPN
PS-A-P	KF10~KF50 ISO63~ISO250	PNP

02. Solenoid Valve Kit

Part Number	Size	Specification
SVK-DC12-KF SVK-DC12-ISO63100 SVK-DC12-ISO160250	KF10~KF50 ISO63~ISO250	DC 12V, 50/60 Hz
SVK-DC24-KF SVK-DC24-ISO63100 SVK-DC24-ISO160250	KF10~KF50 ISO63~ISO250	DC 24V, 50/60 Hz
SVK-AC110-KF SVK-AC110-ISO63100 SVK-AC110-ISO160250	KF10~KF50 ISO63~ISO250	AC 110V, 50/60 Hz
SVK-AC220-KF SVK-AC220-ISO63100 SVK-AC220-ISO160250	KF10~KF50 ISO63~ISO250	AC 220V, 50/60 Hz

01. Manual Angle Poppet Valves, UHV, CF Flange

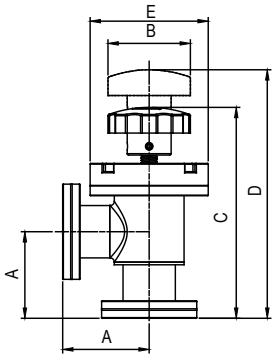

Part Number	Tube OD	A	B	C	D	E
MAV-UHV-CF-133	¾”	40.6	60.0	124.0	138.0	70.0
MAV-UHV-CF-133-1	¾”	55.2	60.0	138.0	153.0	70.0
MAV-UHV-CF-212	1”	52.6	60.0	133.0	147.0	70.0
MAV-UHV-CF-275	1½”	63.0	60.0	154.0	181.0	86.0
MAV-UHV-CF-275-1	1½”	66.5	60.0	157.0	181.0	86.0
MAV-UHV-CF-338	2”	71.9	60.0	185.0	220.0	110.0
MAV-UHV-CF-338-1	2”	78.1	60.0	187.0	222.0	110.0
MAV-UHV-CF-450	2½”	91.2	60.0	210.0	266.0	122.0
MAV-UHV-CF-450-1	2½”	85.8	60.0	204.0	260.0	122.0

- Bonnet sealed via OFHC gasket
- Dimension in mm

02. Manual Angle Poppet Valves, HV, CF Flange

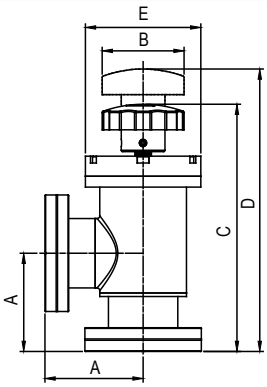

Part Number	Tube OD	A	B	C	D	E
MAV-HV-CF-133	¾	40.6	60.0	124.0	138.0	60.6
MAV-HV-CF-133-1	¾”	55.2	60.0	138.0	153.0	60.6
MAV-HV-CF-212	1”	50.5	60.0	130.0	145.0	60.6
MAV-HV-CF-212-1	1”	52.6	60.0	133.0	147.0	60.6
MAV-HV-CF-275	1½”	63.0	60.0	153.0	178.0	76.5
MAV-HV-CF-275-1	1½”	66.5	60.0	157.0	181.0	76.5
MAV-HV-CF-338	2”	71.9	60.0	181.0	215.0	84.6
MAV-HV-CF-338-1	2”	78.1	60.0	187.0	221.0	84.6
MAV-HV-CF-450	2½”	91.2	60.0	210.0	266.0	101.6
MAV-HV-CF-450-1	2½”	85.8	60.0	204.0	260.0	101.6

- Bonnet sealed via FKM O-ring
- Dimension in mm

03. Manual Angle Poppet Valves, HV, KF / ISO Flanges

Figure 1

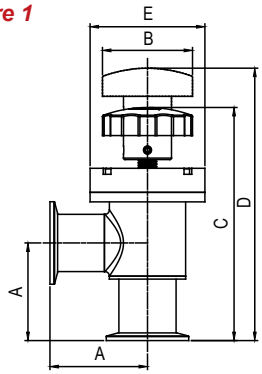

Figure 2

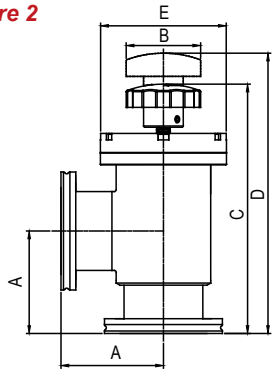

Part Number	Tube OD	Figure	A	B	C	D	E
MAV-HV-KF-16	¾”	1	40.0	60.0	123.0	137.0	60.6
MAV-HV-KF-16-1	¾”	1	54.6	60.0	138.0	152.0	60.6
MAV-HV-KF-25	1”	1	50.0	60.0	130.0	144.0	60.6
MAV-HV-KF-25-1	1”	1	52.1	60.0	132.0	146.0	60.6
MAV-HV-KF-40	1½”	1	65.0	60.0	155.0	180.0	76.5
MAV-HV-KF-50	2”	1	70.0	60.0	179.0	213.0	84.6
MAV-HV-KF-50-1	2”	1	76.2	60.0	185.0	219.0	84.6
MAV-HV-ISOK-63	2½”	2	88.0	60.0	206.0	272.0	101.6
MAV-HV-ISOK-63-1	2½”	2	82.6	60.0	201.0	267.0	101.6

04. Manual Angle Poppet Valves, HV Tube Ends

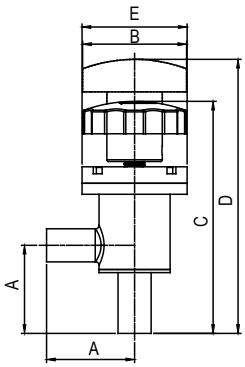

Part Number	Tube OD	A	B	C	D	E
MAV-HV-BW-075	¾”	50.8	60.0	134.0	148.0	60.6
MAV-HV-BW-100	1”	48.3	60.0	128.0	143.0	60.6
MAV-HV-BW-150	1½”	61.2	60.0	151.0	176.0	76.5
MAV-HV-BW-200	2”	72.4	60.0	182.0	216.0	84.6

- Dimension in mm

05. Pneumatic Angle Poppet Valves, UHV, CF Flange

Figure 1

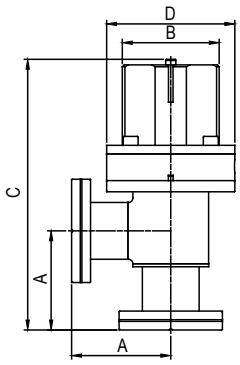

Figure 2

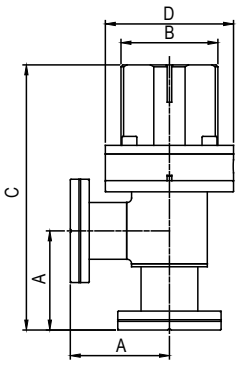

Part Number	Tube OD	Figure	A	B	C	D	Acting
PAV-UHV-CF-133-S	¾”	1	40.6	51.6	152.0	70.0	Single
PAV-UHV-CF-133-S-1	¾”	1	55.2	51.6	166.0	70.0	Single
PAV-UHV-CF-212-S	1”	1	52.6	51.6	161.0	70.0	Single
PAV-UHV-CF-275-S	1½”	1	63.0	65.0	179.0	86.0	Single
PAV-UHV-CF-275-S-1	1½”	1	66.5	65.0	183.0	86.0	Single
PAV-UHV-CF-338-S	2”	1	71.9	66.5	238.0	110.0	Single
PAV-UHV-CF-338-S-1	2”	1	78.1	66.5	244.0	110.0	Single
PAV-UHV-CF-450-D	2½”	2	91.2	70.0	251.0	121.6	Double
PAV-UHV-CF-450-D-1	2½”	2	85.8	70.0	246.0	121.6	Double
PAV-UHV-CF-600-D	4”	2	112.8	89.1	342.0	170.9	Double
PAV-UHV-CF-600-D-1	4”	2	118.3	89.1	348.0	170.9	Double

- Bonnet sealed via OFHC gasket
- Dimension in mm

06. Pneumatic Angle Poppet Valves, HV, CF Flange

Figure 1

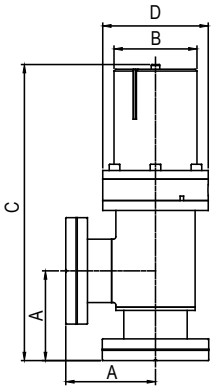

Figure 2

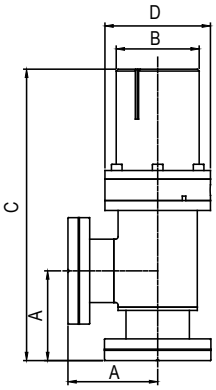

Part Number	Tube OD	Figure	A	B	C	D	Acting
PAV-HV-CF-133-S	¾”	1	40.6	51.6	152.0	60.6	Single
PAV-HV-CF-133-S-1	¾”	1	55.3	51.6	167.0	60.6	Single
PAV-HV-CF-133-D	¾”	2	40.6	55.0	147.0	60.6	Double
PAV-HV-CF-212-S	1”	1	50.5	51.6	159.0	60.6	Single
PAV-HV-CF-212-S-1	1”	1	52.6	51.6	161.0	60.6	Single
PAV-HV-CF-275-S	1½”	1	63.0	65.0	179.0	76.5	Single
PAV-HV-CF-275-S-1	1½”	1	66.5	65.0	183.0	76.5	Single
PAV-HV-CF-275-D	1½”	2	66.5	68.0	178.0	76.5	Double
PAV-HV-CF-338-S	2”	1	71.9	66.5	238.0	84.6	Single
PAV-HV-CF-338-S-1	2”	1	78.1	66.5	244.0	84.6	Single
PAV-HV-CF-450-D	2½"	2	91.2	70.0	251.0	101.6	Double
PAV-HV-CF-450-D-1	2½"	2	85.8	70.0	246.0	101.6	Double
PAV-HV-CF-600-D	4"	2	112.8	89.1	342.0	165.1	Double
PAV-HV-CF-600-D-1	4"	2	118.3	89.1	348.0	165.1	Double
PAV-HV-CF-800-D	6”	2	144.3	140.0	449.0	227.0	Double
PAV-HV-CF-800-D-1	6”	2	164.4	140.0	469.0	227.0	Double

- Dimension in mm

07. Pneumatic Angle Poppet Valves, HV, KF Flange

Figure 1

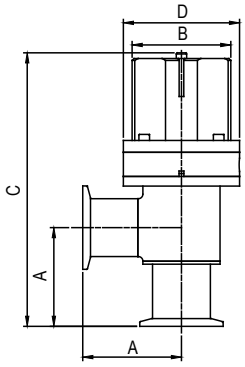

Figure 2

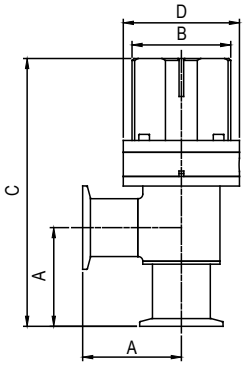

Part Number	Tube OD	Figure	A	B	C	D	Acting
PAV-HV-KF-16-S	¾”	1	40.0	51.6	152.0	60.6	Single
PAV-HV-KF-16-D	¾”	2	40.0	55.0	147.0	60.6	Double
PAV-HV-KF-16-D-1	¾”	2	54.6	51.6	166.0	60.6	Double
PAV-HV-KF-25-S	1”	1	50.0	51.6	158.0	60.6	Single
PAV-HV-KF-25-S-1	1”	1	52.1	51.6	160.0	60.6	Single
PAV-HV-KF-25-D	1”	2	50.0	55.0	154.0	60.6	Double
PAV-HV-KF-25-D-1	1”	2	52.1	55.0	156.0	60.6	Double
PAV-HV-KF-40-S	1½”	1	65.0	65.0	181.0	76.5	Single
PAV-HV-KF-40-D	1½”	2	65.0	68.0	176.0	76.5	Double
PAV-HV-KF-50-S	2”	1	70.0	66.5	236.0	84.6	Single
PAV-HV-KF-50-S-1	2”	1	76.2	66.5	242.0	84.6	Single
PAV-HV-KF-50-D	2”	2	70.0	66.5	232.0	84.6	Double
PAV-HV-KF-50-D-1	2”	2	76.2	66.5	238.0	84.6	Double

- Dimension in mm

08. Pneumatic Angle Poppet Valves, HV, ISO-K Flange

Figure 1

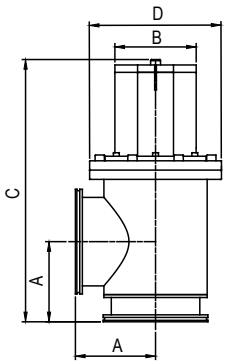

Figure 2

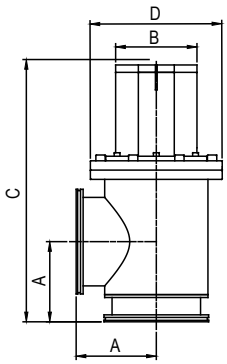

Part Number	Tube OD	Figure	A	B	C	D	Acting
PAV-HV-ISOK-63-S	2½”	1	88.0	70.0	326.0	101.6	Single
PAV-HV-ISOK-63-S-1	2½”	1	82.6	70.0	321.0	101.6	Single
PAV-HV-ISOK-63-D	2½”	2	88.0	70.0	248.0	101.6	Double
PAV-HV-ISOK-63-D-1	2½”	2	82.6	70.0	243.0	101.6	Double
PAV-HV-ISOK-80-S	3”	1	90.0	82.4	361.0	132.0	Single
PAV-HV-ISOK-80-S-1	3”	1	88.9	82.4	360.0	132.0	Single
PAV-HV-ISOK-80-D	3”	2	90.0	82.4	284.0	132.0	Double
PAV-HV-ISOK-80-D-1	3”	2	88.9	82.4	283.0	132.0	Double
PAV-HV-ISOK-100-S	4”	1	108.0	89.1	403.0	165.1	Single
PAV-HV-ISOK-100-S-1	4”	1	113.5	89.1	409.0	165.1	Single
PAV-HV-ISOK-100-D	4”	2	108.0	89.1	338.0	165.1	Double
PAV-HV-ISOK-100-D-1	4”	2	113.5	89.1	344.0	165.1	Double
PAV-HV-ISOK-160-S	6”	1	138.0	140.0	520.0	227.0	Single
PAV-HV-ISOK-160-S-1	6”	1	158.8	140.0	541.0	227.0	Single
PAV-HV-ISOK-160-D	6”	2	138.0	140.0	442.0	227.0	Double
PAV-HV-ISOK-160-D-1	6”	2	158.8	140.0	463.0	227.0	Double
PAV-HV-ISOK-200-D	8”	2	178.0	140.0	648.0	285.0	Double
PAV-HV-ISOK-200-D-1	8”	2	209.6	140.0	659.0	285.0	Double
PAV-HV-ISOK-250-D	10”	2	208.0	202.0	668.0	353.0	Double
PAV-HV-ISOK-250-D-1	10”	2	260.4	202.0	720.0	353.0	Double

- Air fitting taper thread spec.: 1/8 NPT
- Dimension in mm

09. Pneumatic Angle Poppet Valves, Tube Ends

Figure 1

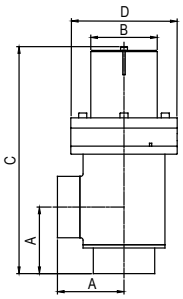

Figure 2

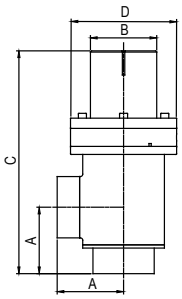

Part Number	Tube OD	Figure	A	B	C	D	Acting
PAV-HV-BW-075-S	¾”	1	50.8	51.6	162.0	60.6	Single
PAV-HV-BW-075-D	¾”	2	50.8	55.0	158.0	60.6	Double
PAV-HV-BW-100-S	1”	1	48.3	51.6	157.0	60.6	Single
PAV-HV-BW-100-D	1”	2	48.3	55.0	152.0	60.6	Double
PAV-HV-BW-150-S	1½	1	61.2	65.0	177.0	76.5	Single
PAV-HV-BW-150-D	1½	2	61.2	68.0	173.0	76.5	Double
PAV-HV-BW-200-S	2”	1	72.4	66.5	239.0	84.6	Single
PAV-HV-BW-200-D	2”	2	72.4	66.5	234.0	84.6	Double
PAV-HV-BW-250-D	2½”	2	76.3	70.0	236.0	101.6	Double
PAV-HV-BW-300-D	3"	2	82.6	82.4	277.0	132.0	Double
PAV-HV-BW-400-D	4"	2	107.2	89.1	337.0	165.1	Double
PAV-HV-BW-600-D	6"	2	152.4	140.0	457.0	227.0	Double
PAV-HV-BW-800-D	8"	2	203.2	140.0	673.0	285.0	Double
PAV-HV-BW-1000-D	10"	2	254.0	202.0	714.0	353.0	Double

- Air fitting taper thread spec.: 1/8 NPT
- Dimension in mm

10. Pneumatic Full Open Angle Valves, HV, KF Flange

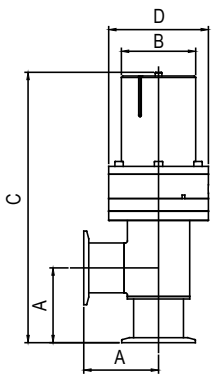

Part Number	Tube OD	TYPE	A	B	C	D	Acting
POAV-HV-KF-50	2"	KF50	76.2	75.7	275.5	101.6	Single / Double

- Dimension in mm

Inline Valves

01. Manual Inline Poppet Valves, UHV, CF Flange

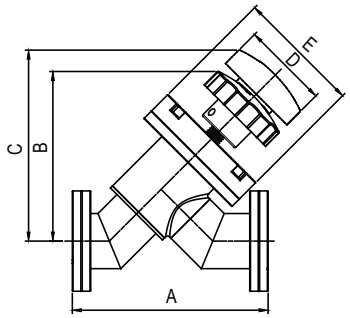

Part Number	Tube OD	A	B	C	D	E
MIV-UHV-CF-133	¾”	119.0	100.0	110.0	60.0	70.0
MIV-UHV-CF-212	1”	114.0	97.0	108.0	60.0	70.0
MIV-UHV-CF-275	1½	133.0	117.0	134.0	60.0	86.0
MIV-UHV-CF-338	2”	182.0	143.0	168.0	60.0	110.0
MIV-UHV-CF-450	2½”	216.0	158.0	198.0	60.0	122.0

- Bonnet sealed via OFHC gasket
- Dimension in mm

02. Manual Inline Poppet Valves, HV, CF Flange

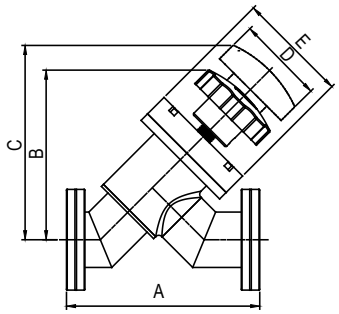

Part Number	Tube OD	A	B	C	D	E
MIV-HV-CF-133	¾”	119.0	100.0	110.0	60.0	60.6
MIV-HV-CF-212	1”	108.0	97.0	107.0	60.0	60.6
MIV-HV-CF-275	1½”	133.0	117.0	134.0	60.0	76.5
MIV-HV-CF-338	2”	182.0	143.0	167.0	60.0	85.0
MIV-HV-CF-450	2½”	216.0	158.0	197.0	60.0	101.6

- Bonnet sealed via FKM O-ring
- Dimension in mm

03. Manual Inline Poppet Valves, HV, KF / ISO Flange

Figure 1

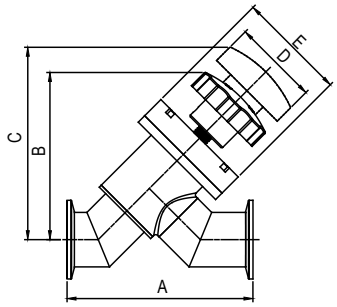

Figure 2

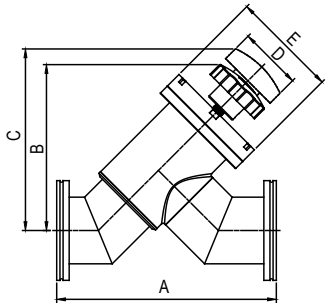

Part Number	Tube OD	Figure	A	B	C	D	E
MIV-HV-KF-16	¾”	1	102.0	100.0	110.0	60.0	60.6
MIV-HV-KF-25	1”	1	107.0	97.0	107.0	60.0	60.6
MIV-HV-KF-40	1½”	1	130.0	117.0	134.0	60.0	76.5
MIV-HV-KF-50	2”	1	177.8	143.0	167.0	60.0	85.0
MIV-HV-ISOK-63	2½”	2	209.0	158.0	197.0	60.0	101.6

- Dimension in mm

04. Manual Inline Poppet Valves, HV Tube Ends

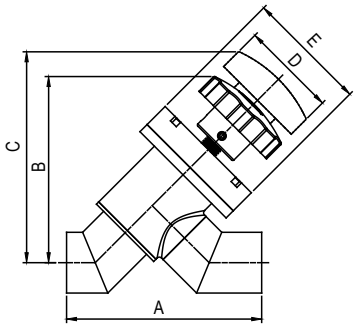

Part Number	Tube OD	A	B	C	D	E
MIV-HV-BW-075	¾”	94.0	100.0	110.0	60.0	60.6
MIV-HV-BW-100	1”	99.0	97.0	107.0	60.0	60.6
MIV-HV-BW-150	1½”	123.0	117.0	134.0	60.0	76.5
MIV-HV-BW-200	2”	170.0	143.0	167.0	60.0	85.0

- Dimension in mm

05. Pneumatic Inline Poppet Valves, UHV, CF Flange

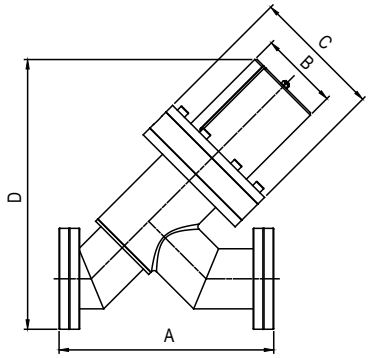

Part Number	Tube OD	A	B	C	D	Acting
PIV-UHV-CF-133-S	¾”	119.4	51.6	70.0	133.0	Single
PIV-UHV-CF-212-S	1”	113.8	51.6	70.0	141.0	Single
PIV-UHV-CF-275-S	1½”	133.0	65.0	86.0	171.0	Single
PIV-UHV-CF-338-S	2”	181.6	66.5	110.0	228.0	Single
PIV-UHV-CF-450-D	2½”	215.9	70.0	121.6	251.0	Double
PIV-UHV-CF-600-D	4”	354.6	89.1	170.9	367.0	Double

- Bonnet sealed via OFHC gasket

06. Pneumatic Inline Poppet Valves, HV, KF Flange

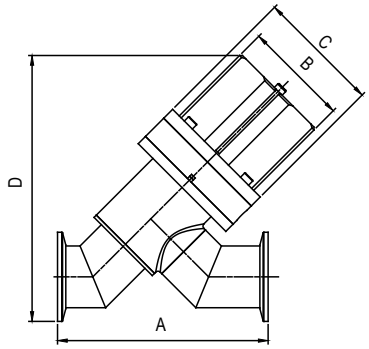

Part Number	Tube OD	A	B	C	D
PIV-HV-KF-16	¾”	102.0	51.6	60.6	132.0
PIV-HV-KF-25	1”	107.0	51.6	60.6	134.0
PIV-HV-KF-40	1½”	130.0	65.0	76.5	164.0
PIV-HV-KF-50	2”	178.0	66.5	84.6	223.0

- Air fitting taper thread spec.: 1/8 NPT
- Dimension in mm

07. Pneumatic Inline Poppet Valves, HV, ISO-K Flange

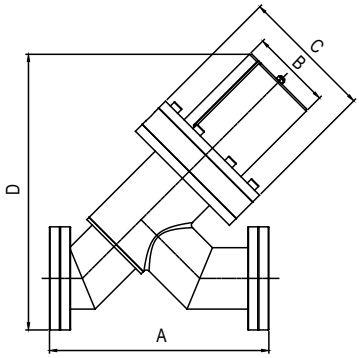

Part Number	Tube OD	A	B	C	D	Acting
PIV-HV-ISOK-63	2½”	209.0	70.0	101.6	242.0	Single / Double
PIV-HV-ISOK-80	3”	268.0	82.0	132.0	279.0	Single / Double
PIV-HV-ISOK-100	4”	345.0	89.1	165.1	357.0	Single / Double
PIV-HV-ISOK-160	6”	381.0	140.0	227.0	477.0	Single / Double

08. Pneumatic Inline Poppet Valves, HV Tube Ends

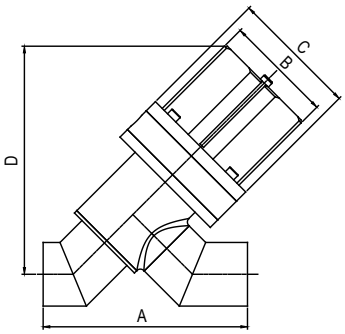

Part Number	Tube OD	A	B	C	D
PIV-HV-BW-075	¾”	94.0	51.6	60.6	117.0
PIV-HV-BW-100	1”	99.0	51.6	60.6	114.0
PIV-HV-BW-150	1½”	123.0	65.0	76.5	137.0
PIV-HV-BW-200	2”	170.0	66.5	84.6	185.0

- Air fitting taper thread spec.: 1/8 NPT
- Dimension in mm

Z-Type Inline Valves

01. Manual Inline Poppet Valves, Z- Type, HV, CF Flanges

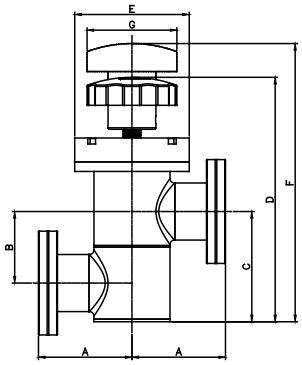

Part Number	Tube OD	A	B	C	D	E	F	G
MZV-HV-CF-133	¾”	55.2	28.5	47.0	132.0	60.6	146.0	60.0
MZV-HV-CF-212	1”	52.1	34.8	53.7	134.0	60.6	148.0	60.0
MZV-HV-CF-275	1½”	62.5	47.8	73.6	164.0	76.5	189.0	60.0
MZV-HV-CF-338	2”	88.3	66.6	104.7	209.0	84.6	243.0	60.0
MZV-HV-CF-450	2½”	86.0	79.0	125.0	239.0	101.6	282.0	60.0

02. Manual Inline Poppet Valves, Z- Type, HV, KF / ISO Flanges

Figure 1

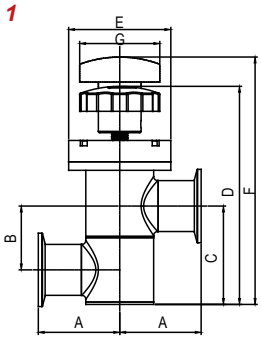

Figure 2

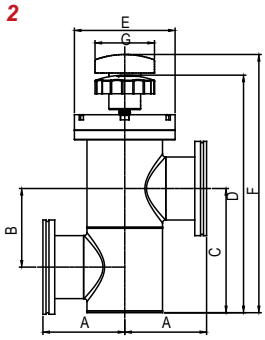

Part Number	Tube OD	Figure	A	B	C	D	E	F	G
MZV-HV-KF-16	¾”	1	54.6	28.5	47.4	132.0	60.6	146.0	60.0
MZV-HV-KF-25	1”	1	51.6	34.8	53.7	134.0	60.6	148.0	60.0
MZV-HV-KF-40	1½”	1	61.0	47.8	73.6	164.0	76.5	189.0	60.0
MZV-HV-KF-50	2”	1	86.4	66.6	104.7	209.0	84.6	243.0	60.0
MZV-HV-ISOK-63	2½”	2	86.0	79.0	125.0	239.0	101.6	282.0	60.0

- Dimension in mm

03. Manual Inline Poppet Valves, Z-Type, HV Tube Ends

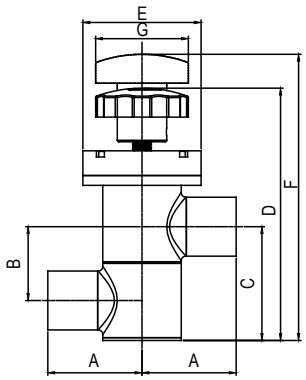

Part Number	Tube OD	A	B	C	D	E	F	G
MZV-HV-BW-075	¾”	50.8	28.5	47.0	132.0	60.6	146.0	60.0
MZV-HV-BW-100	1”	47.8	34.8	53.7	134.0	60.6	148.0	60.0
MZV-HV-BW-150	1½”	57.2	47.8	73.6	164.0	76.5	189.0	60.0
MZV-HV-BW-200	2”	82.6	66.6	104.7	209.0	84.6	243.0	60.0

04. Pneumatic Inline Poppet Valves, Z-Type, HV, CF Flange

Figure 1

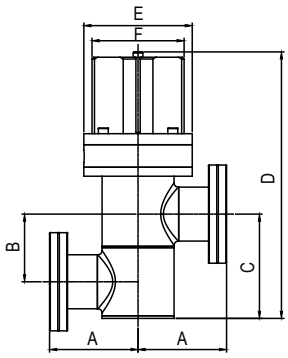

Figure 2

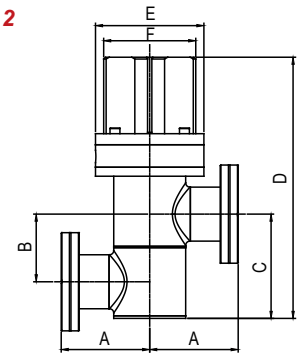

Part Number	Tube OD	Figure	A	B	C	D	E	F	Acting
PZV-HV-CF-133-S	¾”	1	55.2	28.5	47.4	160.0	60.6	51.6	Single
PZV-HV-CF-212-S	1”	1	52.1	34.8	53.7	163.0	60.6	51.6	Single
PZV-HV-CF-275-S	1½”	1	62.5	47.8	73.6	189.0	76.5	65.0	Single
PZV-HV-CF-338-S	2”	1	88.3	66.6	104.7	267.0	84.6	66.5	Single
PZV-HV-CF-450-D	2½”	2	86.0	79.0	125.0	281.0	101.6	70.0	Double

- Dimension in mm

Z-Type Inline Valves

05. Pneumatic Inline Poppet Valves, Z- Type, HV, KF Flange

Figure 1

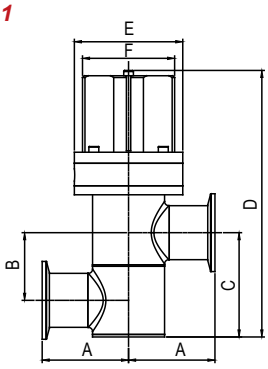

Figure 2

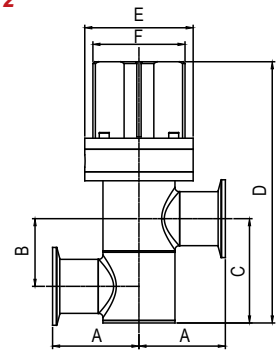

Part Number	Tube OD	Figure	A	B	C	D	E	F	Acting
PZV-HV-KF-16-S	¾”	1	54.6	28.5	47.4	160.0	60.6	51.6	Single
PZV-HV-KF-25-S	1”	1	51.6	34.8	53.7	163.0	60.6	51.6	Single
PZV-HV-KF-40-S	1½”	1	61.0	47.8	73.6	189.0	76.5	65.0	Single
PZV-HV-KF-50-S	2”	1	86.4	66.6	104.7	267.0	84.6	66.5	Single
PZV-HV-ISOK-63-D	2½”	2	86.0	79.0	125.0	281.0	101.6	70.0	Double

06. Pneumatic Inline Poppet Valves, Z- Type, HV Tube Ends

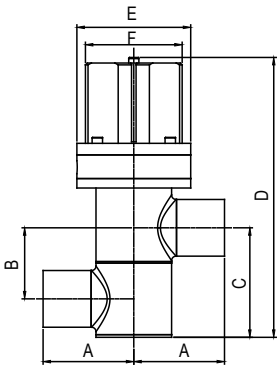

Part Number	Tube OD	A	B	C	D	E	F	Acting
PZV-HV-BW-075	¾”	50.8	28.5	47.4	160.0	60.6	51.6	Single
PZV-HV-BW-100	1”	47.8	34.8	53.7	163.0	60.6	51.6	Single
PZV-HV-BW-150	1½”	57.2	47.8	73.6	189.0	76.5	65.0	Single
PZV-HV-BW-200	2”	82.6	66.6	104.7	267.0	84.6	66.5	Single

- Dimension in mm

01. Heating Angle Poppet Valves, HV, Flange

Figure 1

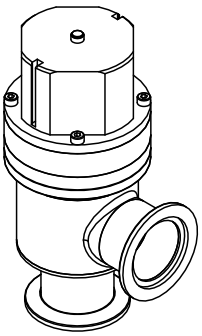

Figure 2

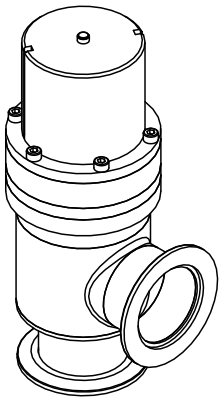

Figure 1

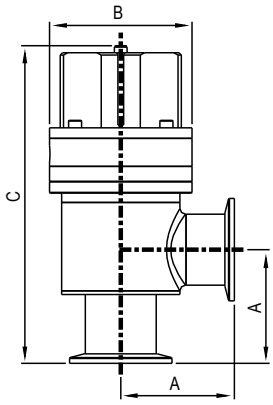

Figure 2

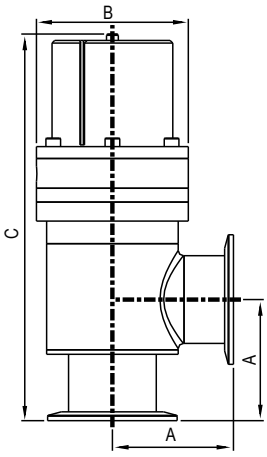

Part Number	Tube OD	Figure	A	B	C
HAV-HV-KF-40	1½”	1	61.0	77.0	170.0
HAV-HV-KF-50	2”	2	70.0	88.0	224.0

- Dimension in mm

Two-Stage Valves

Technical Data For Two Stage Valves (Angle / Inline)

	High Vacuum
Feedthrough	Welded bellows in AM350
Gate seal	FKM O-Ring (Optional for FFKM)
Bonnet seal	FKM O-Ring (Optional for FFKM)
Operate pressure range	760 Torr ~ $1x10^{-8}$ Torr ATM ~ $1.33x10^{-8}$ mbar 101 kPa ~ $1.33x10^{-9}$ kPa
Operate pressure range	1 x 10^{-9} Torr l/s, He $1.33x10^{-9}$ mbar l/s, He $1.33x10^{-10}$ kPa l/s, He
Leak rate	1,000,000 Cycles
Cycle life	0°C~250°C (32°F~482°F) Open, 0°C~200°C (32°F~392°F) Closed
Temperature for valve body	0°C~100°C (32°F ~ 212°F)
Temperature for actuator	0°C~60°C (32°F ~ 140°F)
Temperature for solenoid / position indicator	-10°C~70 °C (14°F ~ 158°F)
Bake temperature	90°C (194°F) for standard (Optional for 150°C (302°F))
Valve body material	SS304L (Optional for SS316L)
Mechanism material	SS304L
Actuator material	Aluminum
Mounting position	Any

Valve's Operation Data

Pneumatic operating pressure	4 bar~ 6 bar / 400 kpa~ 600 kpa / 58 psi~ 87 psi
Position indicator (optional)	Optional magnetic sensor with wire end
Solenoid (optional)	Optional for 24V DC, standard
Failure protection (included as standard)	Spring closed for KF25, KF40, KF50

Valve's Performance Data

	KF25/CF2.12"	KF40/CF2.75"	KF50/CF3.38"
Maximum differential pressure against gate	1,800 Torr 2,400 mbar 240 kpa	1,725 Torr 2,300 mbar 230 kpa	1,500 Torr 2,000 mbar 200 kpa
Maximum differential pressure at opening		1,500 Torr 2,000 mbar 200 kpa	
Pneumatic valve open / close time(s)	depending on configuration	depending on configuration	depending on configuration
Valve's conductance angle type (molecular flow)	15(l/s)	48(l/s)	82(l/s)
Valve's conductance inline type (molecular flow)	12(l/s)	44(l/s)	66(l/s)

01. Pneumatic Two-Stage Angle Valve, HV ,KF Flange

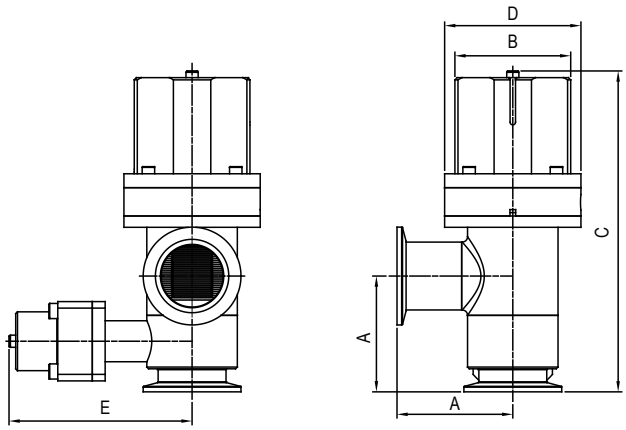

Part Number	Type	Tube OD	A	B	C	D	E
PAVT-HV-KF25	KF25	1”	50	52	154	61	98
PAVT-HV-KF40	KF40	1.5”	65	65	176	77	103
PAVT-HV-KF50	KF50	2”	70	67	232	85	111

02. Pneumatic Two-Stage Inline Valve, HV ,KF Flange

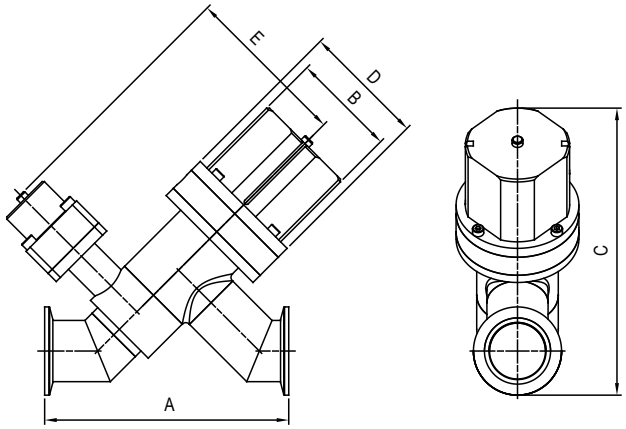

Part Number	Type	Tube OD	A	B	C	D	E
PIVT-HV-KF25	KF25	1”	130	52	157	61	98
PIVT-HV-KF40	KF40	1.5”	152	65	179	77	103
PIVT-HV-KF50	KF50	2”	178	67	238	85	111

- Dimension in mm

Vacuum Ball Valves

Product Information

AdvanTorr® vacuum ball valves are well-suited for use in high and coarse vacuum applications, particularly in the exhaust section of a system where they can protect against harsh processes. The ball valve bodies are manufactured from casted stainless steel, while the inlet and outlet sections are made from forged metal for added durability.

They are made from high-grade materials such as 316L or 316Ti to withstand extreme conditions such as high-temperature and harsh-chemical environments.

Product Features

- Valve Body Material: 316L Stainless Steel
- Ideal for High or Coarse Vacuum: 4,500 Torr to 10^{-6} Torr
- Range of Sizes ½" to 4"
  - ½" to 2" with KF Flanges or Tube Ends
  - 2 1/2" to 4" with ISO flanges
- Actuation Options: Manual or Pneumatic
- Protects Systems from Harsh Environments
- Simple Valve Body Design
- High Chemical Resistance

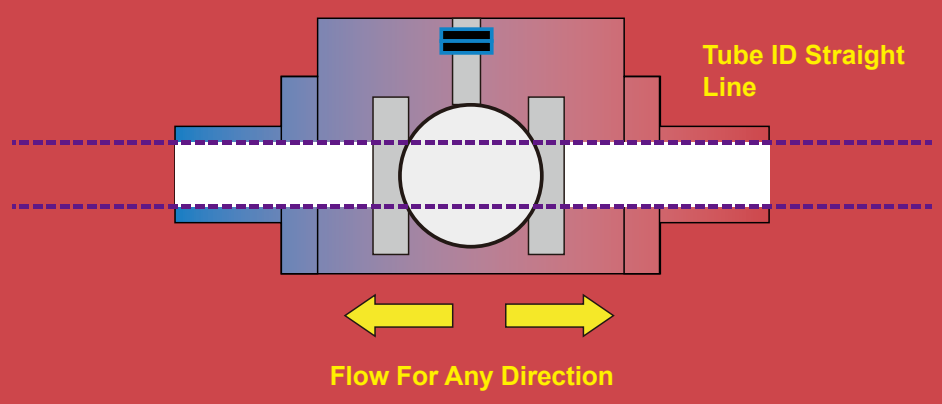

Product Application

Layout for Process System

Vacuum Ball Valves are positioned within the Scrubber Line

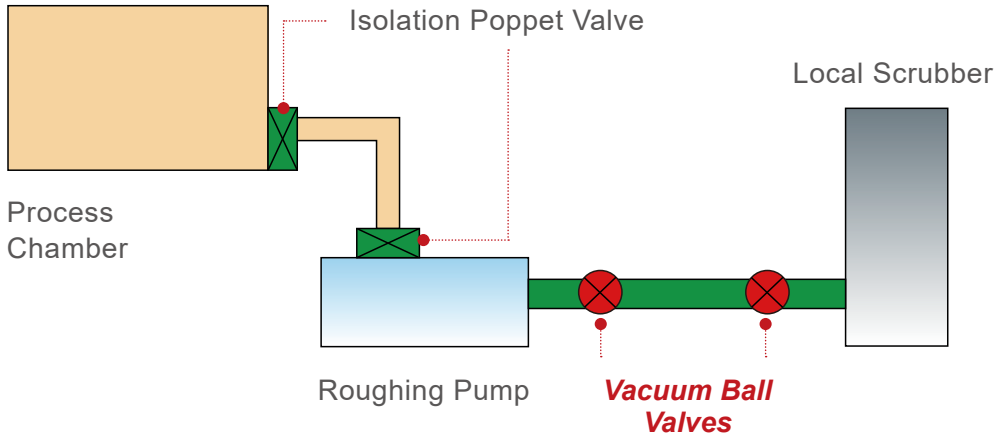

Valve's Operation Concept

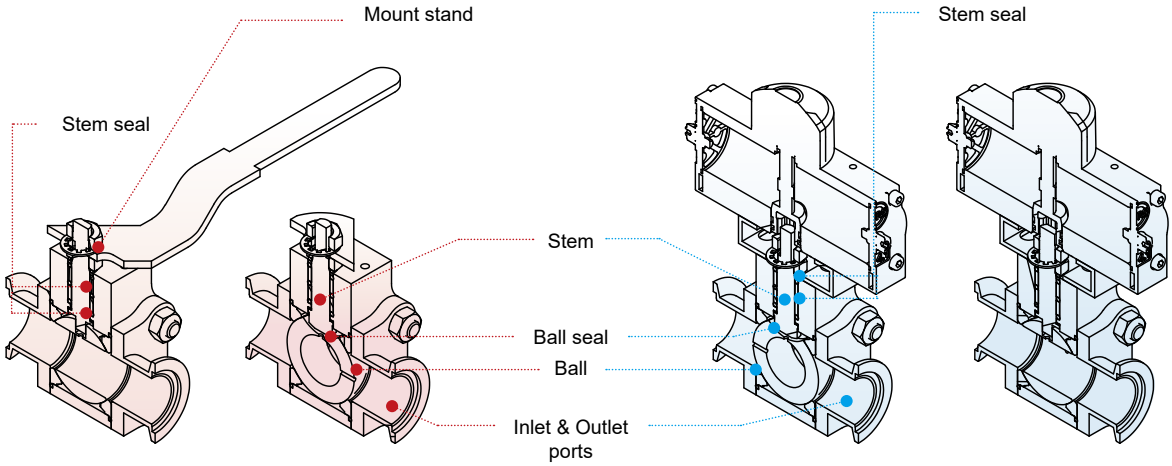

Open position Closed position Closed position Open position

Vacuum Ball Valves

Technical Data for Vacuum Ball Valve

	Medium Vacuum	High Vacuum
Feedthrough	FKM O-ring	FKM / FFKM O-ring
Gate seal	PTFE packing	PTFE packing
Bonnet seal	FKM	FKM / FFKM
Operate pressure range	4,500 Torr~ $1x10^{-5}$ Torr 6,000 mbar~ $1.33x10^{-5}$ mbar 600 kpa~ $1.33x10^{-5}$ kpa	4,500Torr~$1.0X10^{-6}$ Torr 6,000mbar~$1.33X10^{-6}$ mbar 600 kpa~$1.33X10^{-6}$ kpa
Leak rate	$1.0X10^{-9}$ Pa.m3/s $1.0X10^{-10}$ mbar.l/s $1.33X10^{-10}$ Torr.l/s	$1.0X10^{-10}$ Pa.m3/s $1.0X10^{-11}$ mbar.l/s $1.33X10^{-11}$ Torr.l/s
Cycle life	> 20,000 Cycle	
Temperature for valve body	200°C (392°F) Open and Close	
Temperature for actuator	150°C (302°F)	
Temperature for solenoid / position indicator	80°C (176°F)	
Bake temperature	100°C (212°F) for FKM gate seal	
Valve body material	Casting SUS316/L	CNC machined SUS316/L
Mechanism material	SUS316/L	
Actuator material	Pneumatic version=Aluminum Manual version=SUS304/L Handle with plastic cover	
Mounting position	Any	

Valve Operation Data

Pneumatic operating pressure	4 bar~8 bar 400 kPa~800 kPa 58 psi~116 psi
Position indicator (included as standard for pneumatic version)	Integrated visual indicator
Solenoid (optional)	Optional for 24V DC, standard
Failure protection (included as standard)	Integrated handle hook with manual version (Open/ Closed position locked)

Valve's Performance Data

	KF16	KF25	KF40	KF50
Maximum differential pressure against gate	4,500 Torr 6,000 mbar 600 kpa			
Maximum differential pressure at opening	4,500 Torr 6,000 mbar 600kpa			
Pneumatic valve open / close time	2(s)	3(s)	3(s)	4(s)
Valve's conductance inline type (molecular flow)	5(l/s)	12(l/s)	33(l/s)	54(l/s)

01. Manual Casting Ball Valves, KF Flange

Material SS 316L

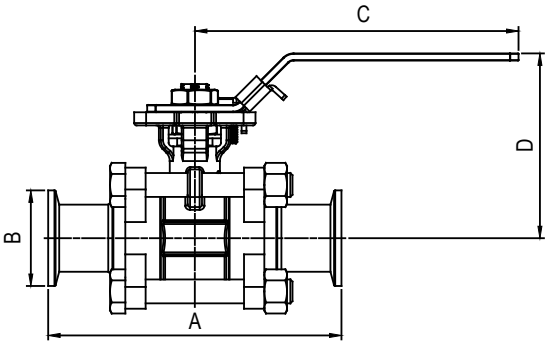

Part Number	Tube OD	A	B	C	D
MBV-CT-KF-10	½”	96.2	30.0	138.2	65.5
MBV-CT-KF-16	¾”	110.3	30.0	138.2	69.8
MBV-CT-KF-25	1”	122.8	40.0	138.2	78.7
MBV-CT-KF-40	1½”	147.5	54.9	190.5	96.6
MBV-CT-KF-50	2”	165.7	75.0	190.5	106.7
MBV-CT-ISO-63	2½”	210.6	95.0	293.3	142.0
MBV-CT-ISO-80	3"	240.1	110.0	293.3	148.5
MBV-CT-ISO-100	4"	253.6	130.0	293.3	179.4

02. Manual Casting Ball Valves, Tube Ends

Material SS 316L

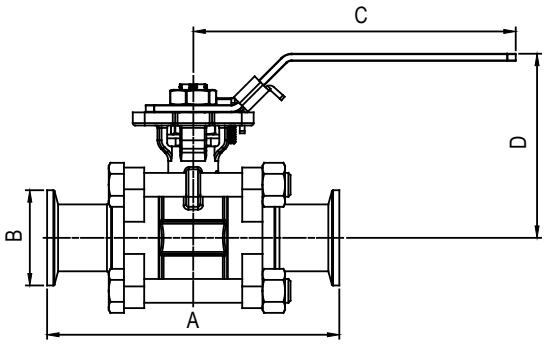

Part Number	Tube OD	A	B	C	D
MBV-CT-075	¾”	102.7	19.1	138.2	69.8
MBV-CT-100	1”	115.2	25.4	138.2	78.7
MBV-CT-150	1½”	139.9	38.1	190.5	96.6
MBV-CT-200	2”	158.1	50.8	190.5	106.7

03. Pneumatic Casting Ball Valves, KF Flange

Material SS 316L

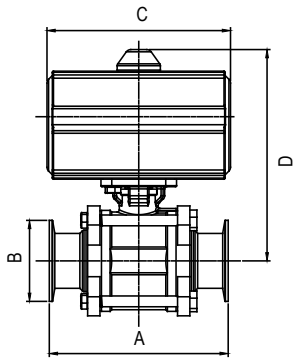

Part Number	Tube OD	A	B	C	D
PBV-CT-KF10	½”	96.2	30.0	147.0	131.5
PBV-CT-KF-16	¾”	110.3	30.0	147.0	135.8
PBV-CT-KF-25	1”	122.8	39.9	147.0	144.7
PBV-CT-KF-40	1½”	147.5	54.9	168.0	173.0
PBV-CT-KF-50	2”	165.7	74.9	184.0	195.2
PBV-CT-ISO-63	2½”	210.6	95.0	262.0	223.7
PBV-CT-ISO-80	3"	240.1	110.0	262.0	238.0
PBV-CT-ISO-100	4"	253.6	130.0	268.0	285.4

04. Pneumatic Casting Ball Valves, Tube Ends

Material SS 316L

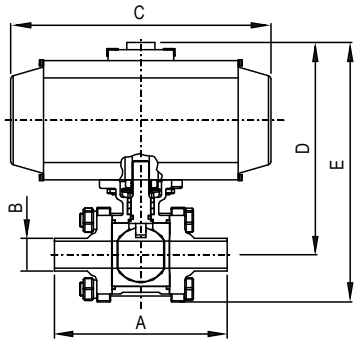

Part Number	Tube OD	A	B	C	D	E
PBV-CT-075	¾”	102.7	19.1	147.0	135.8	163.4
PBV-CT-100	1”	115.2	25.4	147.0	144.7	163.7
PBV-CT-150	1½”	139.9	38.1	168.0	173.0	213.3
PBV-CT-200	2”	158.1	50.8	184.0	195.2	246.5

- Dimension in mm